Equipment Catalogue 4.0$_1$

LOCTITE®

Equipment Catalogue 4.0

- Pressure-Time Dispensing Systems – 1K
- Pressure-Time Dispense Valves Selector Chart – 1K
- Volumetric Dispensing Systems – 1K
- Pressure-Time Dispensing Systems – 2K
- Volumetric Dispensing Systems – 2K
- Hand Applicators
- Dispense Needles and Mixers Selector
- Benchtop Robots – Handling Systems
- Light Cure Equipment
- Air Filter Systems

LOCTITE®

Pressure-Time Dispensing Systems – 1K

IDH 883976
98666

IDH 88633
97006

IDH 2814023
RC32

IDH 2830690
RC34

IDH 360442
97124

IDH 854181
97631

IDH on demand
97560

IDH 2814022
RC30

IDH 2814025
RC40

IDH 2814024
RC 50

IDH 135550
97102

IDH 1275665
97152

IDH 142639
97204

1X

2X

1X

1X

2X

2X

IDH 194420
97131

IDH 88642
97111

Dispense Valve
Selector Chart 1K

IDH 142636
97118

IDH 135557
97115

IDH 215992
97211

2X

IDH 88650
97121

IDH 88643
97112

IDH 444643
97130

IDH 218280
98009

IDH 318654
98013

Start Signal Options

IDH 1147046
97138

IDH 215846/215848
97135/97136

IDH 88644/88645
97113/97114

IDH 1153502
150 bar HP Valve

IDH 315994
97664

IDH 529491
97676

Dispense Needles,
Mixers & Accessories

IDH 2814022

LOCTITE RC30 Manual Reservoir

Application Field

The LOCTITE EQ RC30 Manual Reservoir is suitable for the application of Loctite adhesive with a manual applicator at manual workstations such as in workshops, laboratories, and industrial installations. It is possible to dispense anaerobic and UV curing as well as cyanoacrylate adhesives. The reservoir can accommodate 250 ml, 500 gr, 1 liter, 2 kg and 200 gr, adhesive packages which deliver adhesive to dispensing valves.

Product Features

- User-friendly design
- Low level sensor for process controls
- Equipped with a 0 to 7 bar (0-100psi) manual pressure regulator
- Easy to read pressure gauge
- Can accommodate a variety of Loctite packages
- All pneumatic operation

Product Description

The LOCTITE EQ Vari-Drop applicator is a low cost handheld, manually controlled valve suitable for dispensing low to medium viscosity products. The adjusting screw allows repeatable dispense from drops to heavy beads. The quantity applied is dependent on the stroke set for the trigger, and how long the operator holds down the trigger.

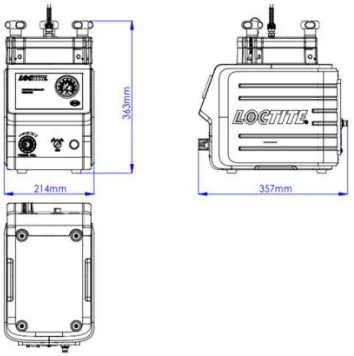

Technical Data	
Dimensions	214 mm x 357 mm x 363 mm (W x D x H)
Weight	3.5 kg
Pneumatic Supply	Clean, dry air not exceed 8 bar (116 psi) and filtered with a maximum of 10 micron
Pneumatic Hose Size	External dia. 6 mm
Items supplied	Operation Manual, Reservoir Tank Fitting 1/4" NPT and tubing) Bottle Holder, Anti-bubbler Fitting and Tube Kit, 1/4" NPT to 6 mm inlet supply line connector, Bottle spacer disc
Vari-Drop Applicator	Must be ordered separately to complete a system IDH # 194420

LOCTITE®

IDH 2814023

LOCTITE RC32 Automatic Reservoir SP

Application Field

The LOCTITE EQ RC32 Automatic Reservoir is equipped with a single point low level sensor that sends an electronic signal to a LOCTITE brand controller and is typically integrated into a dispensing system that consist of a dispensing valve and one of these controllers. The reservoir can be applied directly from the original 250 ml, 500 gr, 1 liter, 2 kg and 200 gr adhesive packages.

Product Features

- Modular design allows user to build suited application process
- Operational with manual, semi-automatic and automatic controllers
- Low level sensor alarm provides warning for adhesive bottle replacement
- Integrated solenoid vent valve

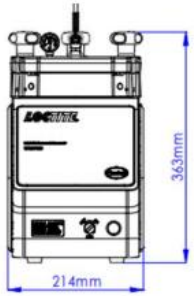

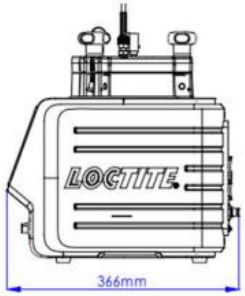

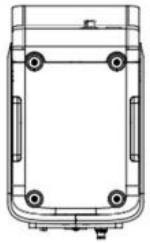

▶ **Dispense Valve Selector**

Technical Data	
Dimensions	214 mm x 366 mm x 363 mm (W x D x H)
Weight	4.0 kg
Internal Control Voltages	24 VDC
Pneumatic Supply	Clean, dry air not exceed 8 bar (116 psi) and filtered with a maximum of 10 micron
Pneumatic Hose Size	External dia. 6 mm
Items supplied	Operation Manual, Reservoir Tank Fitting 1/4" NPT and tubing), Tank Cord, Bottle Holder, 1/4" NPT to 6 mm inlet supply line connector, Anti-bubbler Fitting and Tube Kit, Tube of silicone grease, Bottle spacer disc

LOCTITE®

IDH 2830690

LOCTITE RC34 Automatic Reservoir DP

Application Field

The LOCTITE EQ RC34 Automatic Reservoir DP is equipped with an analogue low level sensor that sends an electronic signal to a LOCTITE brand controller and is typically integrated into a dispensing system that consist of a dispensing valve and one of these controllers. The reservoir can be applied directly from the original 250 ml, 500 gr, 1 liter, 2 kg and 200 gr adhesive packages.

Product Features

- Modular design allows user to build suited application process
- Operational with manual, semi-automatic and automatic controllers
- Low level sensor alarm provides warning of low level and empty for adhesive bottle replacement
- Integrated solenoid vent valve

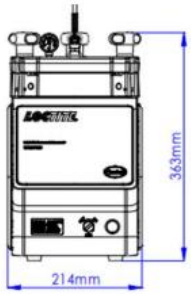

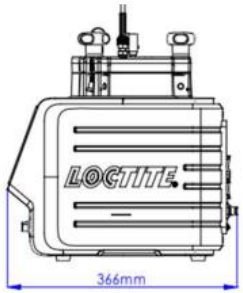

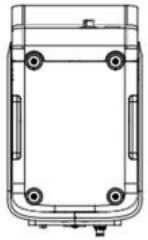

▶ **Dispense Valve Selector**

Technical Data	
Dimensions	214 mm x 366 mm x 363 mm (W x D x H)
Weight	4.0 kg
Internal Control Voltages	24 VDC
Pneumatic Supply	Clean, dry air not exceed 8 bar (116 psi) and filtered with a maximum of 10 micron
Pneumatic Hose Size	External dia. 6 mm
Items supplied	Operation Manual, Reservoir Tank Fitting 1/4" NPT and tubing), Tank Cord, Bottle Holder, 1/4" NPT to 6 mm inlet supply line connector, Anti-bubbler Fitting and Tube Kit, Tube of silicone grease, Bottle spacer disc

LOCTITE®

IDH 2814025

LOCTITE RC40 Integrated Dispenser

Application Field

The LOCTITE EQ RC40 Integrated Semi-Automatic Dispenser combines both a dual channel dispense controller and a reservoir into a single unit. The controller provides two independent digital timing channels that provide control of two pneumatic outputs. These outputs can be used to control dispense valves or any other pneumatic device. The controller can be actuated either by a footswitch (included), fingerswitch or external start signal. It is capable of operating in a timed or continuous mode for dot or bead dispensing applications. The reservoir can accommodate 50 ml, 250 ml, 500 gr, 1 liter, 2 kg and 200 gr adhesive packages which deliver adhesive to dispensing valves.

Product Features

- Controls up to two dispense valves
- Two independent digital timing channels
- Delay setting allows positioning of an advancing slide prior to the opening of dispense valve
- Low level sensor alarm provides warning for adhesive bottle replacement
- Interface connections for customer's PLC to indicate reservoir low level condition and cycle complete signal
- Easy-to-use keypad with LCD display screen for entering values
- Simple menu-driven commands
- Equipped with a 0 to 7 bar (0-100psi) pressure regulator
- Analogue pressure gauge
- Time range is adjustable from 0.01 to 99.99 seconds
- Timed and continuous mode options can be selected
- Manual button for purging adhesive from valves

▶ **Dispense Valve Selector**

NEW

Technical Data	
Dimensions	214 mm x 357 mm x 363 mm (W x D x H)
Weight	5.0 kg
Internal Control Voltages	24 VDC
Input Voltage	100-240 VAC, 50-60 Hz
Power Connections	Plug Ends for North America, Japan, Continental Europe, UK, Australia and China
Pneumatic Hose Size	External dia. 6 mm
Items supplied	Operation Manual, Universal Power AC Adapter, Footswitch, Reservoir Tank Fitting 1/4" NPT and tubing), Bottle Holder, 1/4" NPT to 6 mm inlet supply line connector, Anti-bubbler Fitting and Tube Kit, Bottle spacer disc

LOCTITE®

IDH 2814024

LOCTITE RC50 Integrated Dispenser I4.0

Application Field

The LOCTITE PULSE EQ RC50 Integrated Semi-Automatic Dispenser combines both a dual channel dispense controller and a reservoir into a single unit. The dispenser provides two independent digital timing channels that provide control of two pneumatic outputs. These outputs can be used to control dispense valves or any other pneumatic device. The dispenser can be actuated either by the start/stop button on the front touch panel, a footswitch (included), or external start signal. It is capable of operating in a timed or continuous mode for dot or bead dispensing applications. The reservoir can accommodate 50 ml, 250 ml, 500 gr, 1 liter, 2 kg and 200 gr adhesive packages which deliver adhesive to dispensing valves. The reservoir is suitable for manual workstations as well as integration into automated production lines. The dispenser includes an integrated 'Industry 4.0' function to enable remote communication via Wi-Fi, Bluetooth or ethernet.

Product Features

- Controls up to two dispense valves
- Two independent digital timing channels
- Low level sensor alarm provides warning for adhesive bottle replacement
- Interface connections for customer's PLC to indicate reservoir low level condition and cycle complete signal
- User friendly HMI included with easy-to-use large touch panel for entering values
- Equipped with a 0 to 7 bar (0-100psi) digital pressure regulator (electronic proportional valve)
- Digital pressure gauge included
- Time range is adjustable from 0.01 to 99.99 seconds
- Timed and continuous mode options can be selected
- Manual button for purging adhesive from valves
- Powerful I4.0 function - Provides convenient remote user access in real time via Wi-Fi, Bluetooth, or Ethernet

NEW

Technical Data	
Dimensions	214 mm x 366 mm x 363 mm (W x D x H)
Weight	5.0 kg
Internal Control Voltages	24 VDC
Input Voltage	100-240 VAC, 50-60 Hz
Power Connections	Plug Ends for North America, Japan, Continental Europe, UK, Australia and China
Pneumatic Hose Size	External dia. 6 mm
Items supplied	Operation Manual, Universal Power AC Adapter, Footswitch, Reservoir Tank Fitting 1/4" NPT and tubing), Bottle Holder, 1/4" NPT to 6 mm inlet supply line connector, Anti-bubbler Fitting and Tube Kit, Bottle spacer disc

▶ **Dispense Valve Selector**

IDH 360442

LOCTITE 97124 2 L Bag Dispenser

Application Field

The Bag Reservoir 97124 is suitable for the application of LOCTITE adhesives with a dispensing valve at workstations such as in workshops, laboratories, and industrial installations.

Operation

The LOCTITE 97124 2l Bag Dispenser dispenses LOCTITE adhesive by air pressure. After a 2l bag package of LOCTITE adhesive has been loaded to the reservoir, it is pressurized from a LOCTITE Controller using clean, filtered dry air. The air pressure inside the vessel presses the product out of the bag package without mechanical stress. The dispensing pressure (regulated air from the controller) squeezes the bag and transports the product through the piercing element, the product fitting and the feedline to the dispensing valve. An integrated pneumatic cylinder presses a pusher plate against the bag in a controlled way. This action avoids twisting and closing of the bag.

Benefits

Considerable reduction of packaging waste by using a 2-litre product bag

- Automatic ventilation by solenoid valve in connection with controllers 97102 or 97152
- No contamination as product remains in original container

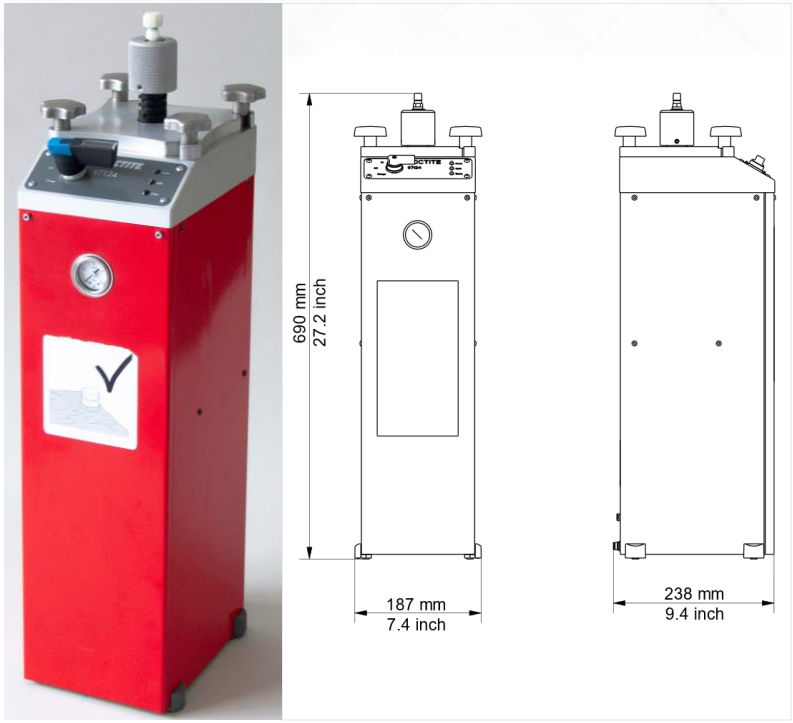

Technical Data	
Dimensions	187 mm (W) x 690 mm (H) x 238 mm (D)
Weight	13.0 kg
Pneumatic Supply	Min. 4 bar (58 PSI), max. 8 bar (115 PSI)
Pneumatic Quality	Filtered 10 µm, oil-free, non-condensing
Over-Pressure Safety	min. 9 bar (130.5 PSI); max. 12.5 bar (174 PSI)
(rupture disc)	Tightening torque of the rupture disc max. 20 Nm
Items supplied	97124 2L Bag Dispenser, Tank cord, Product fitting 1/4", Piercing element 5mm, Reservoir tubing set, Operating Manual

LOCTITE®

IDH 854181

LOCTITE 97631 300 ml Cartridge Dispenser

Application Field

The LOCTITE 97631 Cartridge Dispenser 97631 is used to dispense bubble minimized LOCTITE products in 300 ml cartridges such as Gel-CA's, Anaerobics, Epoxies and Silicones. In connection with a dispensing valve or eccentric rotor pump it can be used in transfer lines, manual or automatic workplaces.

Operation

The LOCTITE 97631 300 ml Cartridge Dispenser should be pressurized from a LOCTITE controller with max. 4 bar (58 PSI). The piston of the pneumatic cylinder presses the product out of the cartridge and forces it through the feedline to the dispensing valve/eccentric rotor pump. When connected to a Controller 97152, the regulated air pressure is available at the unit when the controller is switched on. The piston can be switched to the forward position, "keep in position" or piston backwards. It will be depressurized automatically when the controller is switched off. No movement of the piston is possible.

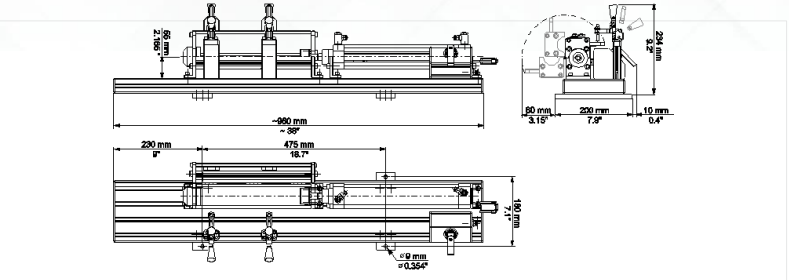

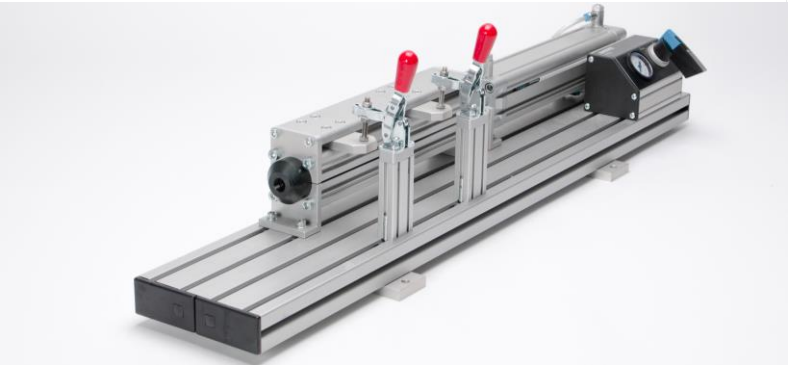

Technical Data	
Dimensions	960mm (L) x 210 mm (W) x 234 mm (H)
Weight	11.6 kg
Pneumatic supply	Regulated air pressure (I) from the controller
Pressure input limit	max. 4 bar (58 PSI)
(maximum feed pressure)	
Pneumatic Hose	OD 6 mm , ID 4 mm
Product Feedline	Standard OD ⅜"
Product Fitting Thread	Standard G ⅜"
Items supplied	300ml Cartridge dispenser, Pushers (for Al, Semco, Ritter & Fischbach cartridges), Adaptors (for Al, Semco, Ritter & Fischbach cartridges), OD 6mm airline x 2m, Sleeve for Al cartridge, Operating Manual

IDH on demand

LOCTITE 97560 Extrusion Pump 26:1

Application Field

The Extrusion Pump 26:1 is a high-pressure pneumatic pump used for extrusion and transfer of high viscous and paste products. The pump is essentially constituted of an air motor and the pumping group, mounted on a ram. In the air motor, compressed air causes the vertical reciprocating movement of the motor piston; this movement is transmitted through a connecting rod to the material pumping piston ending with a shovel plate allowing to suck very viscous products. The shovel plate (follower plate) is supplied with a series of gaskets able to protect the product contained in the pail from powder, moisture and drying process caused by the touch with air. The use of the ram enables to drive the sucking unit of the pump during the product intake phase directly into the 20 ℓ pails. The ram can automatically compensate the shovel plate descent during the use of the product. This system allows lifting of the extrusion pump for a quick replacement of the pail when it is empty. The ratio 26:1 means that the outlet pressure of product is 26 times higher than the pump feed air pressure. In order to ensure best product compatibility, the pumping group and sealing balls are made from stainless steel.

Please consult TCS Experts for further information (Level 3 Support)!

Technical Data	
Dimensions	800 mm (L) x 600 mm (W) x 1800 mm (H)
Weight	67 kg
Pneumatic supply	Max. 7 bar (100 psi)
Pressure input min	max. 3.5 bar (50 psi)
Material Outlet	G 3/4“ female
Maximal Output Pressure	182 bar (2730 psi) for 26:1
Max product flow rate	4 liter/min (26:1)

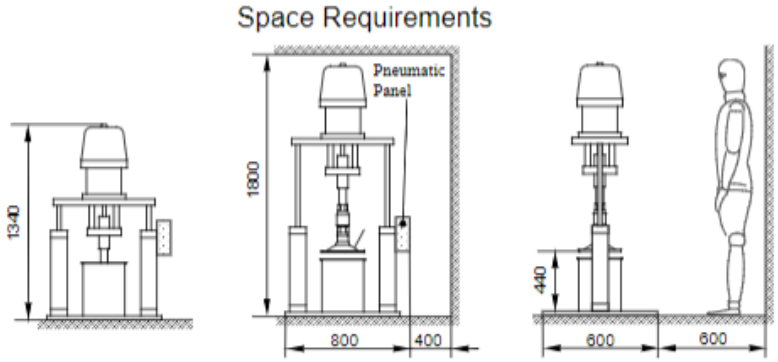

LOCTITE®

IDH 883976

LOCTITE 98666 All Purpose Syringe Dispensing System

Application Field

LOCTITE All Purpose Syringe Dispensing System accurately dispenses adhesives or other fluids. Typical applications are the assembly of electrical components, wire tacking, circuit board repair, and the locking of fasteners. It is designed for adhesives and sealants in 10ml, 30ml, 55ml and 300ml syringes/cartridges from medium viscosities to pastes.

Operation

The LOCTITE Digital Syringe Dispenser 883976 is a semi-automatic dispensing system designed to dispense adhesives and fluids packaged in 3, 5, 10, 30, 55 syringes and 300 ml cartridges. The unit has digital timing control with decimal settings to 0.001 seconds for increased precision over typical pressure-time systems. An adjustable pressure regulator controls a pulse of air, and when used in conjunction with an airline adapter attached to an adhesive syringe barrel, will provide a controlled dispensed amount of adhesive. The system can be operated in the manual, incremental, or timed (automatic) dispense mode to dispense dots, beads or to fill syringes.

Benefits

Digital timing control

- Compact design to minimize workspace requirement
- Vacuum suck back to ensure no drips or run-on
- Useful for all kinds of applications: drops, beads, potting

Technical Data	
Dimensions	152 mm (W) x 165 mm (D) x 178 mm (H)
Weight	1.2 kg (2.6 lbs)
Input Voltage	24 VDC
Air Input	Maximum 7 bar (100 psi)
Air Output	Maximum 7 bar (100 psi)
Timer Range	0.02 – 60.00 s
Cycle Modes	Manual, Incremental or Timed
Items supplied	98666 All Purpose Syringe dispenser
	Universal Power Cord and Adapter
	Foot Switch
	Syringe Stand
	10ml and (1) 30ml Airline Adapter
	Dual Unit Stacking Lock Pin
	Air line Support Mast
	Needle Sample Kit
	Inlet Air Hose (6mm OD x 6ft) & Fitting Kit

▶ **Needle Selector**

Click here to watch the demo video!

IDH 88633

LOCTITE 97006 Precision Syringe Dispensing System

Application Field

LOCTITE 97006 Precision Syringe Dispensing System accurately dispenses adhesives or other fluids. Typical applications are the assembly of electrical components, wire tacking, circuit board repair, and the locking of fasteners. It is designed for adhesives and sealants in 10ml, 30ml, 55ml and 300ml syringes/cartridges from viscosities as low as 5mPas to pastes.

Operation

The Syringe Dispenser 97006 is connected to an external electrical and pneumatic supply. The Control Unit 97006 regulates the adjusted dispensing pressure and controls the dispensing during the selected dispensing time. Pressure variation of more than 10 % results in an error message on the digital display. By means of air pressure on the plug in the syringe, the product is transported to the dispensing needle. The built-in precision vacuum regulator prevents dripping of the product during pauses in dispensing.

Benefits

Digital Precision regulator for accurate flow control

- Vacuum suck back to ensure no drips or run-on
- Useful for all kinds of applications: drops, beads, potting

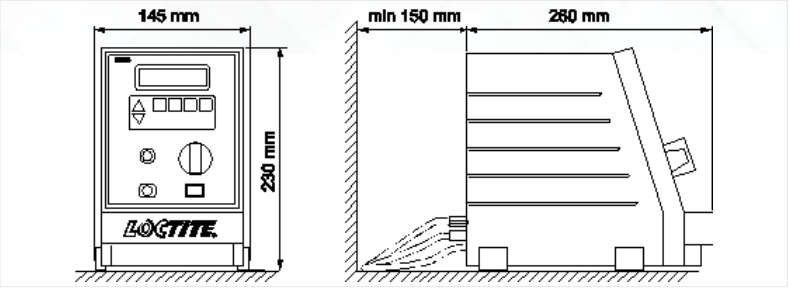

Technical Data	
Dimensions	145mm (W) x 230 mm (H) x 260 mm (D)
Weight	3.0 kg
Power Supply	90 – 260 V AC; 47 – 63 Hz
Power Consumption	Approx. 40 W
Internal Control Voltages	5 V DC; 12 V DC; 24 V DC
Pneumatic Supply	min. 2 bar (29 PSI); max. 12 bar (174 PSI)
Pneumatic Quality	Filtered 10 µm, oil-free, non-condensing
Regulation range of the pressure regulator	0.00 – 7.00 bar (0.00 – 100 PSI)
Pressure Indication	0.00 – 7.00 bar (0.00 – 100 PSI)
Pneumatic Hose Size P in	Internal dia. 4 mm; outer dia. 6 mm;
Items supplied	97006 Precision Syringe Dispense System, Power cord, operation manual, applicator holder, syringe kit, needle varity kit, footswitch

▶ **Needle Selector**

Click here to watch the demo video!

IDH 135550

LOCTITE 97102 Semi-Automatic Controller

Application Field

The Semi-Automatic Controller 97102 controls the exact application of LOCTITE Products from a product reservoir by means of a dispensing valve.

Operation

The LOCTITE 97102 semi-automatic controller has been designed for precision dispensing. The digital pressure display and digital time ranging from 0.04 to 99.9 seconds allows the operator to make pin-point accurate deposits when applying a wide range of fluids from low to high viscosity. This controller can be interfaced with various LOCTITE reservoirs and valves to make a complete dispensing system. The semi-automatic controller controls the selected dispensing pressure in the reservoir and the pneumatic operation of the dispense valve according to the selected dispensing time. The start signal for dispensing is provided by an external footswitch or fingerswitch. Error messages are shown on a digital display and are accompanied by an audible alarm.

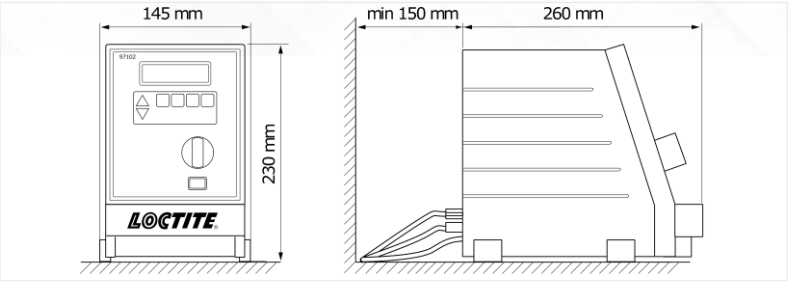

Technical Data	
Dimensions	145 mm (W) x 230 mm (H) x 260 mm (D)
Weight	2.8 kg
Power Supply	90 – 260 VAC; 47 – 63 Hz
Power Consumption	Approx. 40 W
Compressed Air Supply	min. 2 bar (29 psi); max. 12 bar (174 psi)
Pneumatic Hose	
▪ **Control Air Connection O.D.**	6 mm +0.05 -0.10
▪ **Dispensing Valve O.D.**	4 mm +0.05 -0.10
▪ **Reservoir O.D.**	6 mm +0.05 -0.10
Continuous Sound Pressure Level	< 70 dB(A)
Items supplied	97102 Semi-Auto Controller, Power cord, Pneumatic tubing OD 6mm x 1.2m, Operating Manual

Click here to watch the demo video!

IDH 1275665

LOCTITE 97152 Dual Channel Controller

Application Field

The LOCTITE Dual-Channel Controller 97152 is a versatile multi-functional controller for actuating 1 – 2 dispensing valves as well as appropriate peripheral equipment such as reservoir, advancing slide, rotorspray, on-line flow monitor etc.!

Operation

The LOCTITE Dual Channel Controller 97152 utilizes the latest microprocessor technology to create a user-friendly control system for workstations in manufacturing environments. The controller is made up of a micro-controller core, a user interface keypad and graphic LCD display. A solenoid valve module and a precision pressure regulator are integrated into the unit; an external solenoid valve module may be connected as an additional option.

Multiple interfaces allow easy connection to peripheral devices (valves, reservoirs, dispense and flow monitors or PLC). The keypad allows the user to easily change dispense time, pressure, and mode of operation settings. All adjustments and the system status overview are displayed on the screen. Up to 4 different dispense applications with different dispense parameters can be set and stored. These applications, as stored for a maximum of 4 different parts, can be actuated via the keyboard or through the primary controller.

Benefits

- Convenient setup and programming of even complex dispense stations.
- Automatic sequencing of advance slide, rotorspray and dispense valve.
- Maximum process quality by control of time, pressure and optionally flow.
- PIN-locking option for setup parameters.
- Full integration capability into highly automated production systems.

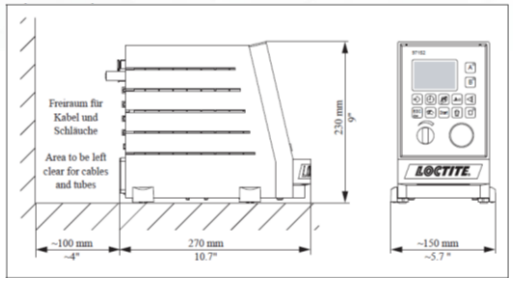

Technical Data	
Dimensions	150 (W) x 230 (H) x 270 (D) mm
Weight	3.0 kg
Power Supply	100-240 VAC; 50/60 Hz
Power Consumption	approx. 60 W
Internal Control Voltages	5 VDC; 24 VDC
Pneumatic Supply	min. 2 bar; max. 10 bar
Quality	filtered 10 µm, oil-free, non-condensing
Adjustment Range of the pressure Regulator	0.1 – 7.00 bar
Pressure Indication	0.1 – 7.00 bar
Pneumatic Hose Size, P in	ID Ø 4 mm ; OD Ø 6 mm
Pneumatic Hose Size, to connect reservoir	ID Ø 4 mm; OD Ø 6 mm
Items supplied	97152 Dual Channel Controller, Power cord, airline 6 mm, operation manual

Click here to watch the demo video!

IDH 142639

LOCTITE 97204 Solenoid Valve Module

Operation

Electromagnetic valves are combined into a valve array with common air supply, eliminating complex pneumatic lines and making installation of the unit much easier. The four-channel LOCTITE 97204 solenoid valve module brings pneumatic energy close to the dispensing valves and provides electrical connections for 2 Rotorsprays and 2 advancing slides including limit switches.

Benefits

4 independent 5/2-way solenoid valves

- 2 electrical outputs for rotorsprays
- 4 electrical inputs for limit switches
- 1 central multipole connector to automatic controller 97152

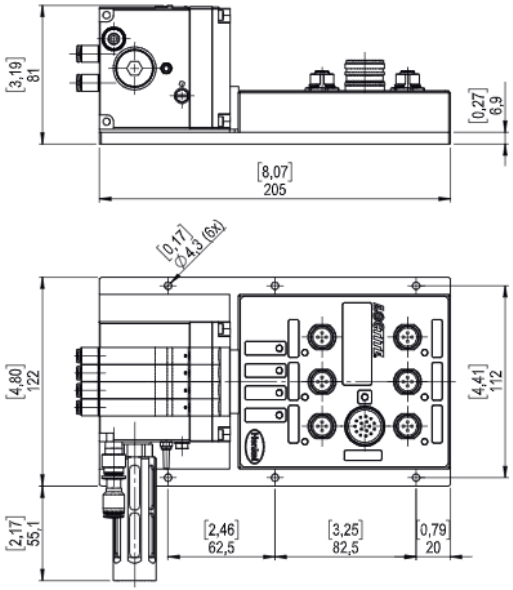

Technical Data	
Dimensions	132 mm (W) x 73 mm (H) x 210 mm (D)
Weight	2.5 kg
Air Input	2 – 8 bar, filtered to maximum of 10 µm
Items supplied	97204 Solenoid valve module

IDH 142636

LOCTITE 97118 Advancing Slide 50 mm

Application Field

With the LOCTITE 97118 Advancing Slide, a dispensing valve or a rotorspray with dispensing valve can be moved exactly and vibration-free to a defined dispensing position and returned to its initial position.

Benefits

- Allows simple and precise positioning of valves and rotorsprays
- Air flow controls to adjust advance and retract speed
- Easy installation with Automatic Controllers 97152
- Reed switch with 4-pin M12 circular connectors for sensing the two end positions

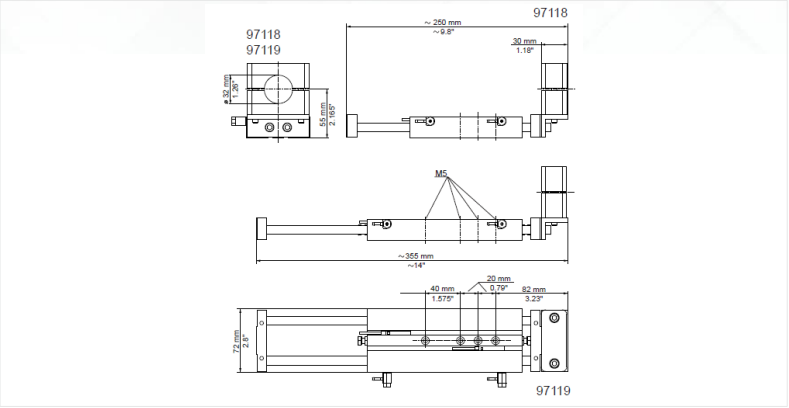

Technical Data	
Weight 50mm / 100mm	1.3 kg / 1.5 kg
Rated Voltage, proximity switch	24 VDC/AC
Pneumatic Supply, Cylinder	Max. 10 bar (145 PSI)
Items supplied	Advancing slide, Connection kit, Operating Manual

IDH 135557

LOCTITE 97115 Rotorspray

Application Field

LOCTITE 97115 Rotospray is used to apply LOCTITE products to the interior cylindrical surfaces of work pieces. The Rotorspray is designed for anaerobic adhesives.

Operation

The Rotorspray 97115 is used in conjunction with a dispense valve to apply Loctite anaerobic adhesives. The dispensing valve is clamped in the holder of the Rotorspray so that the tip of the flexible dispensing needle is directed to the inside of the wetting holes on the rotor disk. The LOCTITE Controller 97152 must control: Switching on/off of the Rotorspray and the preselected dispensing time after the rated rotor speed is reached.

As long as the dispensing valve is open, the product is dispensed through the wetting holes by centrifugal force and uniformly distributed onto the cylindrical inner surface of the part. In conjunction with an advancing slide, reaching the end of the advancing movement triggers the dispensing. The head of the Rotorspray has a longitudinal play of 5 mm. Within this distance, unintentional contact with an obstacle can be compensated without the rotor disk or the drive assembly and its shaft being damaged.

Benefits

Accurate, controlled spray pattern

- High speed rotation for large and small rotor disks
- Fail to spin alarm

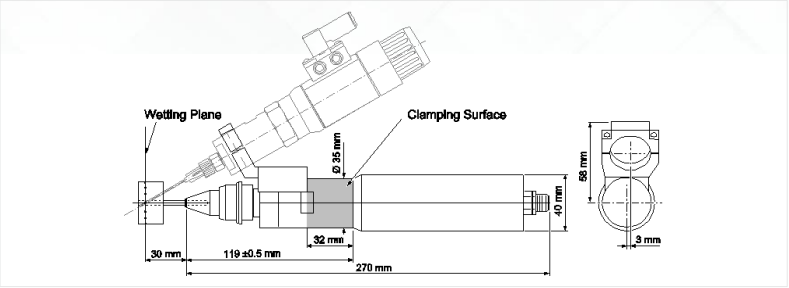

Technical Data	
Weight	0.530 kg
Standard Rotational speed	8,000 rpm
Adjustable Speed Range	3,500 – 8,000 rpm in steps of 500 rpm
Power Consumption	Constant current ~ 0.2 A, Starting-up current up to 2 A W
Adjustable starting-up current	2 A
Rated monitored time to reach speed	0.5 sec
Adjustable monitored time to reach speed	No limit
Rated voltage Safety extra low	24 V DC
Items supplied	97115 Rotorspray, Rotor disk 10 mm & 25 mm, rotor cord, operation manual, different mounting clamps for all valves/pumps

Click here to watch the demo video!

IDH 215992

LOCTITE 97211 On-Line Preamplifier

Application Field

The 97211 is designed specifically for applications requiring high accuracy in dispensing LOCTITE adhesives. It is an ideal tool for quality assurance.

Operation

The integrated flow monitor of the LOCTITE controller 97152 in connection with the 97211 online Preamplifier measures the dispense pressure characteristic by means of a pressure sensor and stores this parameter. The pressure sensor is integrated in the dispensing valve. The measuring time corresponds with the dispense time sequence. The controller compares the measured pressure characteristic with a previously stored reference characteristic, based on four different criteria: Dispensing time, integral of pressure characteristic (corresponds with quantity of product dispensed), length of envelope curve for pressure characteristic and center of gravity. If the measured values are within the pre-set tolerance zone in comparison to the reference value, this dispensing cycle is recognized as OK and the ready signal will be available. If the deviation is outside the tolerance zone, this dispensing cycle is detected as an error, and a fault is signaled. This message is indicated on the display at the controller. It is also provided as a signal at the PLC interface of the LOCTITE controllers.

Benefits

Adjustable amplifying factor with LED signal strength indication

- Power supply to pressure-based sensor
- Single channel

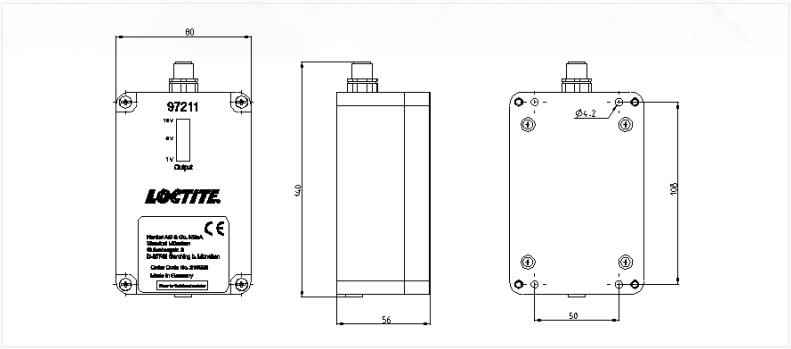

Technical Data	
Dimensions	80 mm (W) x 57 mm (H) x 141 mm (D)
Weight	0.24 kg
Power Input	24 VDC
Signal Output	1 – 10 VDC
Protection Grade	IP 65
Max Length of the cable between Pressure Sensor and Preamplifier	5m
Max Length of the cable between Preamplifier and Controller	10m
Items supplied	97211 Preamplifier
	Connection cord to Controller
	Operating Manual

IDH 1147046
97138

▶ **Flow Sensing Valve**

Click here to watch the demo video!

Pressure-Time Dispense Valve Selector Chart – 1K

	IDH 88650 97121	IDH 88643 97112	IDH 444643 97130	IDH 218280 98009	IDH 318654 98013	IDH 215846 97135	IDH 215848 97136	IDH 88644 97113	IDH 88645 97114	IDH 1153502	IDH 315994 97664	IDH 529491 97676	IDH 1147046 97138
												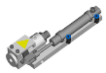	
Wetted parts	PTFE	POM, PTFE	PTFE	POM, PE-UHMW	POM, PE-UHMW	PTFE	PTFE	POM, PTFE	POM, PTFE	Stainless Steel	Stainless Steel	POM	POM, PE-UHMW
Viscosity mPas	Low to medium	Medium to high	Low to medium	Low	Low	Low	Medium	Medium to high	Medium to high	High	High	High	Low
Flow rate	Medium	High	Medium	Low	Low	Medium	Medium	Medium	High	High	High	High	Low
Recommended products	CA, UV, AN	UV, AN	CA, AN	Activators, AN, Primers, UV	Activators, CA, Primers	AN, UV	AN, UV	AN, CA, Epoxy, UV	AN, CA, Epoxy, UV	SI/MSP's	SI/MSP's	AN	Activators, AN, CA, Primers, UV
Suck-back feature	No	Yes	No	No	No	No	No	Yes	Yes	Yes	No	No	No
Stroke adjustments	No	No	Yes	Yes	Yes	No	No	Yes	Yes	Yes	No	No	Yes

CA: Cyanoacrylates; **UV:** UV and light curable products; **AN:** Anaerobics/Acrylics; ***POM:** Polyoxymethylene (Polyacetals), **SI**: Silicone, **MSP's**: Modified Silane - Polymers;
PTFE: Polytetrafluorethylene; **PE-UHMW:** Ultra high molecular weight polyethylene

Low viscosity up to 1.500 mPas | Mid viscosity from 1.501 - 10.000 mPas | High viscosity from 10.000 mPas onwards…

IDH 194420

LOCTITE 97131 Vari-Drop Applicator

Application Field

The Vari-Drop™ applicator is suitable for manually dispensing all LOCTITE products that can be dispensed using time/pressure dispensing. This covers products with viscosities up to 80,000 mPas. The adjusting screw allows repeatable dispense from light to heavy beads or drops. The quantity applied is dependent on the stroke set for the trigger. Adjust the screw for the desired amount.

Operation

When using the Vari-Drop applicator with the Manual Reservoir, screw the tank fitting into the tank cover and tighten with a wrench. Leave a length of tubing extending beyond the fitting so that the tubing stops within 2-3 cm from the inside bottom surface of the product container when the reservoir cover is closed. Then tighten the nut and ferrule assembly to hold the tubing secure. Follow reservoir instructions for operation

#97131 / #97132
Operating Elements

1. Spring, pinch
2. Applicator Housing
3. Needle Adapter
4. Feed Line Connector
5. Applicator Trigger
6. Pinch Tube Subassembly
7. Screw Flow Adjuster
8. Screw, Housing Assembly
9. Silicone Tubing (not shown)
10. Nut and Sleeve Subassembly
11. Tubing, Teflon® Lined, 1/4 O.D.
12. Fitting, Thermocouple, 1/4 Tube x 1/4 NPT
13. Spring Guard for 1/4 O.D. Tubing
14. Wire Ties for Tubing Loop
15. Luer-Lck Sleeve

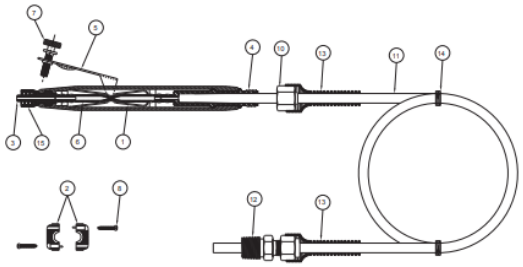

Dispense Needles, Mixers & Accessories

▶ **Needle Selector**

IDH 88642

LOCTITE 97111 Hand-Held Applicator

Application Field

The LOCTITE 97111 Hand-held Applicator is for manual dispensing of single component products up to 15,000 cPs viscosity.

Operation

The LOCTITE 97111 hand-held applicator is actuated by a finger trigger that is ergonomically designed for comfort, application control and a low actuation force to reduce hand fatigue. It also incorporates a suck-back feature which prevents dripping or stringing. This valve comes attached to a 2 meter length of 1/4 inch black feed line so no assembly is required. If dispensing an adhesive over 15,000 mPas, then a 3/8 inch feed line upgrade kit is available that will allow dispensing products up to 50,000 mPas viscosity.

Benefits

- Ergonomically designed for hand comfort and application control
- Low actuation force to reduce hand fatigue
- Designed with a suck-back feature for dispensing accuracy and control
- Dispenses Loctite products up to 50,000 mPas with 3/8” feedline
- Dispenses Loctite products up to 15,000 mPas with 1/4” feedline

Technical Data	
Weight	0.100 kg
Pneumatic Supply	Min 4 bar (60 psi), max 7 bar (105 psi)
Pneumatic Quality	Filtered 10µm, oil free, noncondensing
Product Feedline	6.3 mm (1/4 in.)
Items supplied	97111 Hand-held applicator
	Applicator holder
	Sample needle kit
	Operation Manual

Dispense Needles, Mixers & Accessories

▶ **Needle Selector**

LOCTITE®

IDH 444643

LOCTITE 97130 ErgoLoc Valve

Application Field

The LV Hand-Held Applicator 97130 is suitable for dispensing LOCTITE products in a manual or semi-automatic process. It can be used especially for CA and other low-pressure applications up to 2 bar (30 PSI). It is suited to Anaerobic, cyanoacrylate and light cure adhesives with viscosities under 10,000 mPas.

Operation

The LV Hand-Held Applicator is a normally closed, fail-safe dispensing valve with adjustable opening. The LOCTITE product is transported through a product feedline to the LV Hand-Held Applicator driven by the dispensing pressure in the product reservoir. The opening of the valve takes place by pressurizing an internal single acting cylinder. The rod pulls open and permits the fluid to flow through the product chamber. Closing of the valve is achieved by removing the air supply and spring force. On closing a piston at the end of the valve seals against a valve seat preventing any leakage of adhesive.

Within the shut off valve assembly, PTFE material is used for the area in contact with the adhesive to prevent curing of adhesive in this part of the valve.

The opening of the LV Hand-Held Applicator 97130 is pneumatically controlled. The start is initiated by footswitch or finger switch. The amount of product dispensed is controlled by: The amount of pressure in the reservoir, the length of time the shut off valve remains open, the stroke of the shutoff piston in the actuator assembly and the dispensing needle.

Benefits

- Forward closing avoids air entrapment and potential premature curing of cyanoacrylates
- Dispenses repeatable drop sizes down to 0.005 g
- Stroke adjustment for fine-tuning dispense characteristics
- Slim ergonomic design greatly reduces hand fatigue

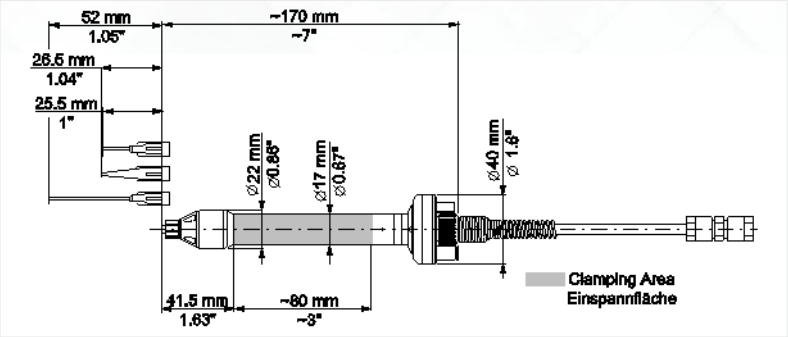

Technical Data	
Dimensions	170mm (L) x 40mm (D)
Weight	0.140 kg
Fluid Pressure	4-30 psi (.25-2 bar)
Pneumatic Supply	Minimum – 60 psi (4.8 bar) Maximum – 100 psi (7 bar)
Items supplied	97130 Ergoloc valve, Needle variety kit, 2m PTFE lined OD ¼" Feedline, 2m Pneumatic tubing, Operating Manual
Accessory	Footswitch IDH 88653, Fingerswitch IDH 531803

▶ **Needle Selector**

Click here to watch the demo video!

IDH 88650

LOCTITE 97121 Pinch Valve Applicator

Application Field

The LOCTITE 97121 Pinch valve is used for the exact metering of low-viscosity cyanoacrylate adhesives up to a viscosity of approx. 500 mPas.!

Operation

The LOCTITE 97121 Pinch Valve is used for the exact metering of low-viscosity adhesives up to a viscosity of approx. 500 mPas. With the supplied larger product hose (diameter 2.7 mm), products with a viscosity of up to approx. 5000 mPas can be dosed. The Pinch valve is opened pneumatically. The dosing start is triggered by a foot switch or an electric finger switch. Sealing in the rest position is achieved by squeezing the product line by a pneumatic piston. By limiting the opening stroke of the valve, very small delivery quantities can be achieved.

Benefits

- Ergonomic design provides comfortable handling
- Adhesive only contacts feedline therefore only feedline needs replacement

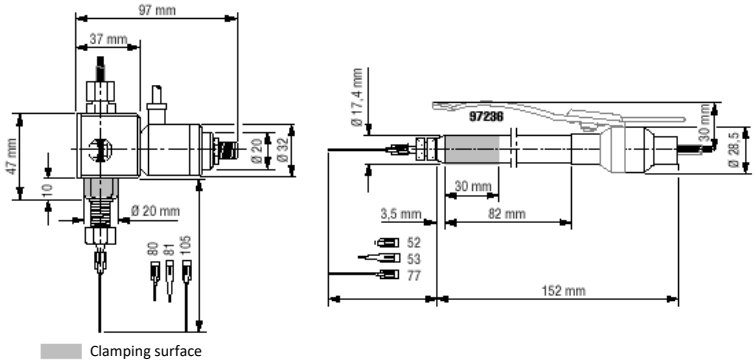

Technical Data	
Weight	0.1 kg
Compresses Air Supply	min 5 bar
Product Line	inner diameter 2.4mm
Control Air	outer diameter 4mm
Items supplied	97121 Pinch valve
	4 x Sealing ring
	Product feedline 1/4"
	Applicator pencil
	Pistol grip
	Sample needle kit
	Product feedline kit 2,4mm x 0,4mm
	Operating Manual

Dispense Needles, Mixers & Accessories

▸ **Needle Selector**

LOCTITE®

IDH 88643

LOCTITE 97112 Hand-Held Applicator

Application Field

The LOCTITE 97112 Hand-held Applicator is for timed dispensing of single component adhesives.

Operation

The LOCTITE 97112 hand-held applicator is actuated using a foot switch (not included). It is ergonomically designed for comfort, application control, and a low actuation force to reduce hand fatigue. It also incorporates a suckback feature which prevents dripping or stringing. A 2-meter, black 1/4-inch feedline delivers the products up to 15,000 mPas viscosity thru this valve. An optional feedline upgrade kit (item # 97220) will allow dispensing of adhesives up to 50,000 mPas!

Benefits

- Ergonomic design provides comfortable handling
- Suck-back feature to prevent post-dispense dripping

Technical Data	
Weight	0.140 kg
Pneumatic Supply	Min 4 bar (60 psi), max 7 bar (105 psi)
Pneumatic Quality	Filtered 10µm, oil free, non condensing
Product Feedline	6.3 mm (1/4 in.)
Items supplied	97112 Hand-held applicator
	Applicator holder
	Sample needle kit
	Operation Manual

Dispense Needles, Mixers & Accessories

▶ **Needle Selector**

LOCTITE®

IDH 215846 / 215848

LOCTITE 97135 / 97136 Diaphragm Dispense Valve

Application Field

LOCTITE 97135 / 97136 Diaphragm Dispense Valve is a pneumatically activated dispense valve which is designed to be either mounted or hand-held in conjunction with pressure-time dispense systems. The Diaphragm Valve is suitable for the exact application of LOCTITE products. It is designed for anaerobic adhesives up to viscosities of 2.500 mPas for the 97135 and higher viscosities for the 97136.

Operation

The LOCTITE product is transported through a product feedline to the Diaphragm valve by the dispensing pressure in the product reservoir.

At the shut off valve assembly, PTFE material is used for the area in contact with the adhesive to prevent curing of adhesive in this part of the Diaphragm valve. The opening of the diaphragm valve takes place by pressuring an internal single acting cylinder. In the inactive position, the diaphragm valve is closed by spring force. A piston pushing against a diaphragm, which seals off the product bore in the valve, achieves sealing in idle position. The floating mounted diaphragm enables easy repair and service.

The amount of product dispensed is controlled by amount of pressure in the reservoir, length of time the shut off valve remains open and dispensing needle size.

The diaphragm valve is not suitable for moisture sensitive product like Cyanoacrylate.

Benefits

Fail-safe spring assists closing of valve upon loss of air pressure

- Internal components are PTFE to prevent premature curing
- Modular design and floating diaphragm allow for easy cleaning

▶ **Needle Selector**

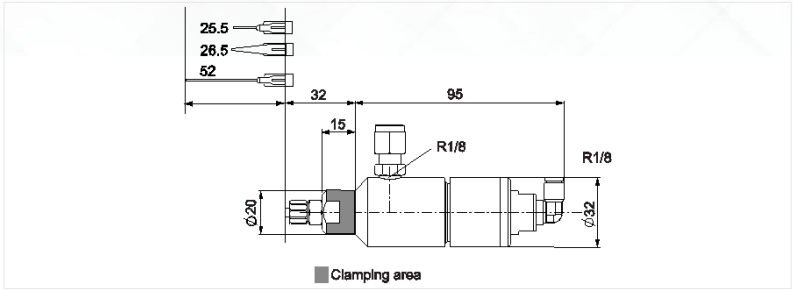

Technical Data	
Weight	Filtered 10 µm, oil-free, non-condensing
Pneumatic supply	Min. 5 bar (73 PSI), max. 7 bar (100 PSI)
Pneumatic Hose Size	External Dia.: 4 mm, Internal Dia.: 2.5 mm
Product Feedline	Standard: 1/4 inch 97135
	Standard: 3/8 inch 97136
	Optional: Feedline Upgrade Kit 3/8 inch
Dispensing Pressure Range of the Valve	0.5 bar (7 PSI) - 4 bar (60 PSI)
Items supplied	Diaphragm Dispense valve, Needle set, airline 4 mm, operation manual, feedlines

Click here to watch the demo video!

IDH 88644 / 88645

LOCTITE 97113 / 97114 Stationary Dispensing Valve

Application Field

LOCTITE 97113 / 97114 Stationary Dispense Valves are designed for pressure-time applications with anaerobic and light cure adhesives up to viscosities of 15,000 mPas for the 97113 or higher viscosities for the 97114.

Operation

The LOCTITE Stationary Applicator Valve is a slim, lightweight, patented seal-less dispense valve designed for pressure-time applications. This valve is modular in design and consists of a product shut-off valve and valve actuator, providing quick on-line serviceability.

This valve has an adjustable suck-back feature to eliminate stringing and dripping. It has a double-acting cylinder that allows for adjustable opening and closing times for increased dispensing control. This valve must be used in conjunction with a controller and product reservoir.

Benefits

- Slim, lightweight, seal-less
- Adjustable suck-back feature eliminates stringing and dripping
- Can be used in stationary mounted, robotic, or hand-held applications

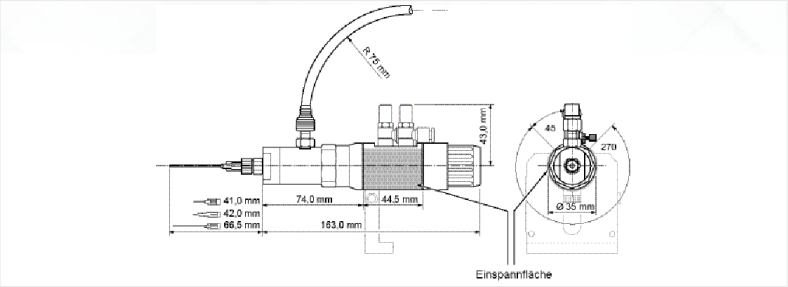

Technical Data	
Dimensions	163,0 mm (L) x 44,5 (Dia.) mm
Weight	0.34 kg (0.75 lbs)
Air Input (minimum)	4 bar (60 psi)
Product Pressure	7bar (100 psi)
Feedline Inlet	1/4" 97113
	3/8" 97114
Items supplied	Stationary Dispensing valve, Needle set, 2 x airline 4 mm, operation manual, feedline 1/4" or 3/8", kink protection spring

▶ **Needle Selector**

Click here to watch the demo video!

IDH 218280

LOCTITE 98009 Light Cure Dispensing Valve

Application Field

LOCTITE 98009 Light Cure Dispensing Valve is a normally-closed diaphragm valve that provides high-resolution stroke adjustment and results in consistent flow control. Light Cure Adhesives, anaerobic retaining compounds and threadlockers in a broad range of viscosities from low to medium viscosity can be dispensed with the LOCTITE 98009 valve.

Operation

The LOCTITE Light Cure Dispensing Valve is opened via a single-acting cylinder. In rest position the dosing valve is closed. The sealing in the rest position is affected by pressure of the piston via a spring on the diaphragm. The diaphragm seals the product bore in the valve.

An inlet pressure of 4 to 6 bar moves the diaphragm seal, which is connected to a piston rod, over a preset path length so that product can flow into the diaphragm chamber.

The product quantity is determined by the following factors: Opening time of the dosing valve, dosing pressure in the product tank, size of the dosing tip, stroke of the diaphragm closing piston (max. 0.6 mm) and viscosity of the product to be processed.

Benefits

- Bubble-free, no-drip dispensing
- Precision adjustment of stroke to control flow
- Can be used in stationary mounted, robotic, or hand-held applications

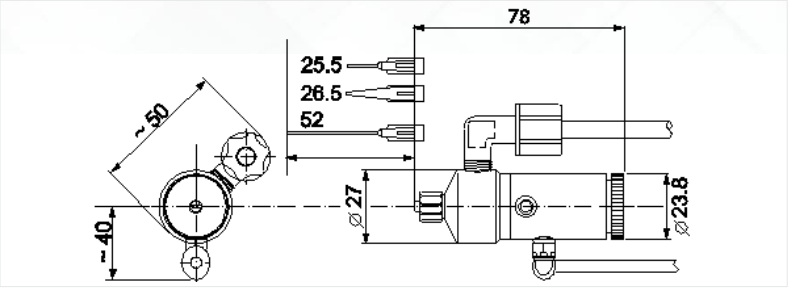

Technical Data	
Dimensions	78,5 mm (L) x 26,9 mm (D)
Weight	0.3 kg
Compressed Air Supply	Minimum 5 bar (73 PSI), maximum 7 bar (100 PSI)
Pneumatic Quality	Filtered 10 µm, oil-free, non condensing
Hose Size, Pilot Air Connection	Outer Diameter 4mm, Inner Diameter 2,5
Product Hose	Standard 1/4"
Dosing Pressure Range of Valve	0,5 bar – 4 bar
Items supplied	98009 Light Cure dispensing valve, Needle set, airline 4 mm, operation manual, 1/4" feedline, fixing screw

▶ **Needle Selector**

Click here to watch the demo video!

IDH 318654

LOCTITE 98013 Cyanoacrylate Dispensing Valve

Application Field

LOCTITE 98013 Cyanoacrylate Dispensing Valve is a normally-closed diaphragm valve that provides high-resolution stroke adjustment and results in consistent flow control. It is designed for instant adhesives, retaining compounds and threadlockers in a broad range of viscosities from low to medium viscosity.

Operation

The LOCTITE Cyanoacrylate Dispensing Valve is opened via a single-acting cylinder. In rest position the dosing valve is closed. The sealing in the rest position is affected by pressure of the piston via a spring on the diaphragm. The diaphragm seals the product bore in the valve.

An inlet pressure of 4 to 6 bar moves the diaphragm seal, which is connected to a piston rod, over a preset path length so that product can flow into the diaphragm chamber.

The product quantity is determined by the following factors: Opening time of the dosing valve, dosing pressure in the product tank, size of the dosing tip, stroke of the diaphragm closing piston (max. 0.6 mm) and viscosity of the product to be processed.

Benefits

- Bubble-free, no-drip dispensing
- Precision adjustment of stroke to control flow
- Can be used in stationary mounted, robotic, or hand-held applications

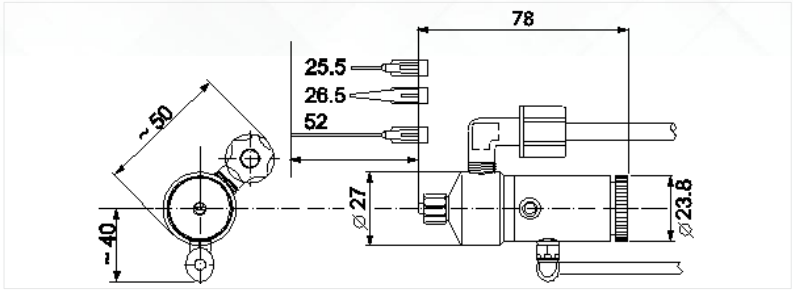

Technical Data	
Dimensions	78,5 mm (L) x 26,9 mm (D)
Weight	0.3 kg
Compressed Air Supply	Minimum 5 bar (73 PSI), maximum 7 bar (100 PSI)
Pneumatic Quality	Filtered 10 µm, oil-free, non condensing
Hose Size, Pilot Air Connection	Outer Diameter 4mm, Inner Diameter 2,5
Product Hose	Standard 1/4"
Dosing Pressure Range of Valve	0,5 bar – 4 bar
Items supplied	98013 Cyanoacrylate Dispensing valve, Needle set, airline 4 mm, operation manual, 1/4" feedline, fixing screw

▶ **Needle Selector**

Click here to watch the demo video!

IDH 1147046

LOCTITE 97138 Flow Sensing Dispensing Valve 3.5 Bar

Application Field

LOCTITE 97138 Flow Sensing Dispensing Valve is a normally-closed diaphragm valve that provides high-resolution stroke adjustment and results in consistent flow control. It includes a Pressure Transducer that is used to measure the pressure of the adhesive flow which is an indication of the flow of the adhesive. Light Cure Adhesives, retaining compounds and threadlockers in a broad range of viscosities from low to medium viscosity can be dispensed with this valve.

Operation

The LOCTITE Dispensing Valve is opened via a single-acting cylinder. In rest position the dosing valve is closed. The sealing in the rest position is effected by pressure of the piston via a spring on the diaphragm. The diaphragm seals the product bore in the valve. An inlet pressure of 4 to 6 bar moves the diaphragm seal, which is connected to a piston rod, over a preset path length so that product can flow into the diaphragm chamber. The product quantity is determined by the following factors: Opening time of the dosing valve, dosing pressure in the product tank, size of the dosing tip, stroke of the diaphragm closing piston (max. 0.6 mm) and viscosity of the product to be processed. The dispensing valve 97138 can only be used in conjunction with the preamplifier 97211 and the control units 97152.

Benefits

- Online monitoring of adhesive flow to confirm process quality bubble-free, no-drip dispensing
- Precision adjustment of stroke to control flow
- Can be used in stationary mounted, robotic, or hand-held applications

Technical Data	
Dimensions	78,5 mm (L) x 26,9 mm (D)
Weight	0.3 kg
Compressed Air Supply	Minimum 5 bar (73 PSI), maximum 7 bar (100 PSI)
Pneumatic Quality	Filtered 10 µm, oil-free, non condensing
Hose Size, Pilot Air Connection	Outer Diameter 4mm, Inner Diameter 2,5
Product Hose	Standard 1/4“
Dosing Pressure Range of Valve	0,5 bar – 4 bar
Items supplied	97138 Flow Sensing Valve (including 3.5 bar Pressure sensor and cable), Needle set, airline 4 mm, operation manual, 1/4" feedline, fixing screw

▶ **Needle Selector**

Click here to watch the demo video!

IDH 315994

LOCTITE 97664 Shut-Off Valve for Silicones

Application Field

The 97664 Shut-Off Valve is designed for dispensing LOCTITE silicones.

Operation

The LOCTITE 97664 Shut-off Valve for Silicones is used in combination with an Eccentric Rotor Pump for dispensing silicones. It opens and shuts by a double acting cylinder. Additionally if the air supply is switched off it closes by spring force. This prevents the running out of the adhesive. The valve is mounted directly at the rotor pump. Different dispensing nozzles are available according to the application. A pressure sensor for monitoring the dispensing can be mounted directly to the Shut-Off valve.

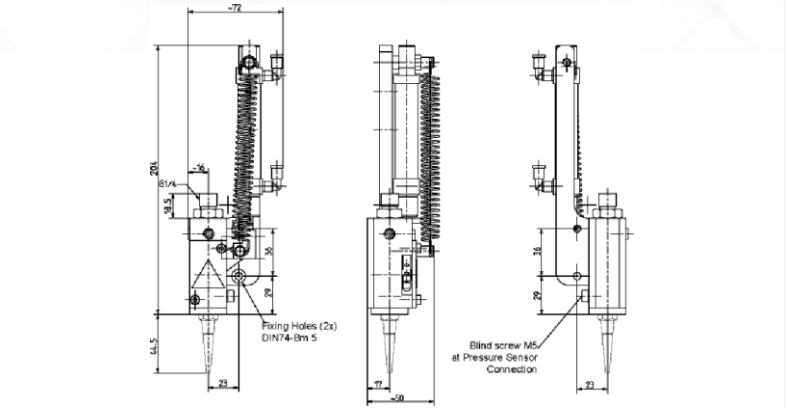

Technical Data	
Weight	0.6 kg
Pneumatic Supply	min. 5 bar (73 PSI) – max. 10 bar (145 PSI)
Pneumatic Tube Size	External Dia. 4 mm, internal Dia. 2.5 mm
Connection Thread Feedline/Pump	G ¼"
Max. Product Pressure	40 bar (580 psi)
Quality of Air Pressure	Filtered oil-free or filtered oiled
Items supplied	97664 Shut-Off valve (Needle must be ordered separately)

IDH 529491

LOCTITE 97676 Shut-Off Valve for Anaerobics

Application Field

The 97676 Shut-Off Valve is designed for dispensing LOCTITE anaerobic adhesives.

Operation

The LOCTITE 97676 Shut-off Valve for Anaerobics is used in combination with an Eccentric Rotor Pump for dispensing Anaerobic adhesives. It opens and shuts by a double acting cylinder. Additionally if the air supply is switched off it closes by spring force. This prevents the running out of the adhesive. The valve is mounted directly at the rotor pump. Different dispensing nozzles are available according to the application. A pressure sensor for monitoring the dispensing can be mounted directly to the Shut-Off valve.

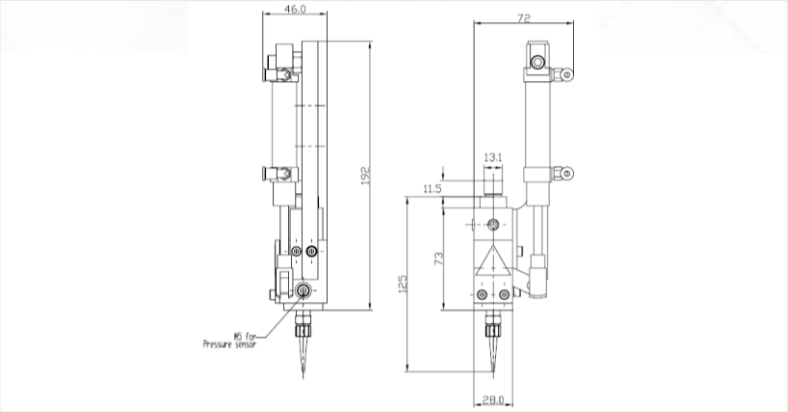

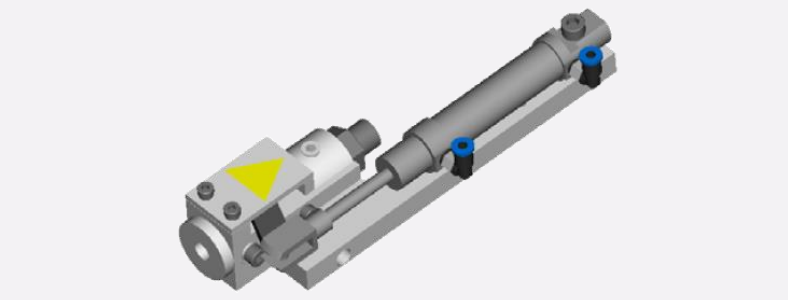

Technical Data	
Weight	0.5 kg
Pneumatic Supply	min. 5 bar (73 PSI) – max. 10 bar (145 PSI)
Pneumatic Tube Size	External Dia. 4 mm, internal Dia. 2.5 mm
Connection Thread Feedline/Pump	G ¼"
Max. Product Pressure	40 bar (580 psi)
Quality of Air Pressure	Filtered oil-free or filtered oiled
Items supplied	97676 Shut-Off valve (Needle must be ordered separately)

LOCTITE®

IDH 1153502

LOCTITE High Pressure 150bar/3mm Dispense Valve

Application Field

The 1153502 High pressure 150bar/3mm Dispense Valve is designed for dispensing LOCTITE silicones at high pressure.

Operation

The LOCTITE High Pressure Dispense Valve is a double-acting dispense valve that is used to dispense high viscosity adhesives when pumped from pail and drum pump systems. This stainless steel dispense valve is compatible with silicones, MS polymers, and urethane products. It features suck-back capability and can operate at fluid pressures up to 2175 psi. (150 bar).

- Handles high viscosity adhesives approx. 500,000 to 2,000,000 mPas.
- Stainless steel valve ensures long term, durable dispensing performance.
- Bubble-free, no-drip dispensing with suck-back control.
- Lightweight and durable; can be mounted or comfortably handheld.
- High resolution stroke adjustment
- Double acting - air to open; air to close.
- Operates at fluid pressures up to 2175 psi. (150 bar).

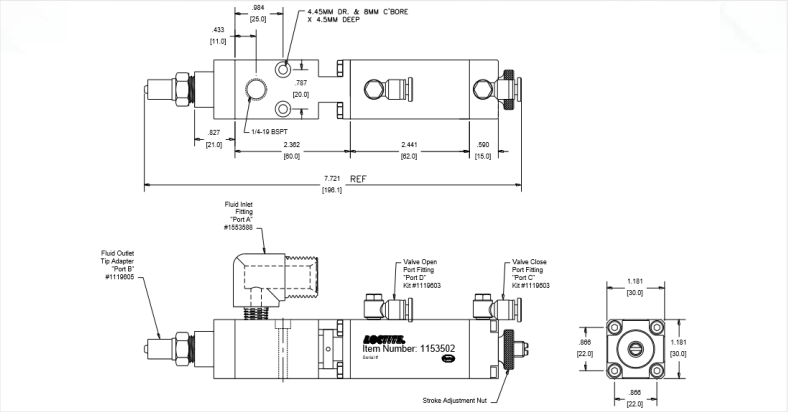

Technical Data	
Weight	0.68 kg
Pneumatic Supply	min. 4 bar (55 PSI) – max. 6 bar (85 PSI)
Pneumatic Tube Size	External Dia. 4 mm, internal Dia. 2.5 mm
Max. Product Pressure	150 bar (2185 psi)
Quality of Air Pressure	Filtered oil-free or filtered oiled
Items supplied	150 bar dispense valve, Fluid inlet/outlet fittings, air input fitting, 2 metre airline (Needles must be ordered separately)

▶ **Needle Selector**

Start Signal Options

Start Signal Options

IDH **88653**
97201 **Footswitch**

IDH 531803
97293
Fingerswitch for Ergoloc valve

IDH 142644
97236
Fingerswitch for Pinch Valve

IDH 530015
Proximity Switch Unit (inductive)

IDH 529887
Proximity Switch Unit (capacitive)

IDH 88653

LOCTITE Footswitch

Application Field

The LOCTITE Footswitch is designed for to initiate LOCTITE Dispense and Curing equipment.

Operation

The LOCTITE Footswitch is used in combination with LOCTITE Dispense and Curing equipment. It connects to the equipment via a standard Male 9 pin D connector.

It provides a start signal to each dispense/cure equipment and enables the operator to keep hands free for other assembly tasks.

Technical Data	
Weight	0.6 kg
Electrical connector	Standard male 9 pin D connector
Items supplied	97201 Footswitch

LOCTITE®

IDH 531803

LOCTITE Fingerswitch for Ergoloc Valve

Application Field

The 97293 fingerswitch is designed to be used in conjunction with the LOCTITE Ergoloc Valve (IDH 444743).

Operation

An ergonomically designed fingerswitch connects directly to the Ergoloc Dispense Valve. This provides an ideal method for initiating a dispense cycle where trigger initiation is preferred.

The fingerswitch interfaces directly with standard Loctite control units by means of a ‘D’ plug connector.

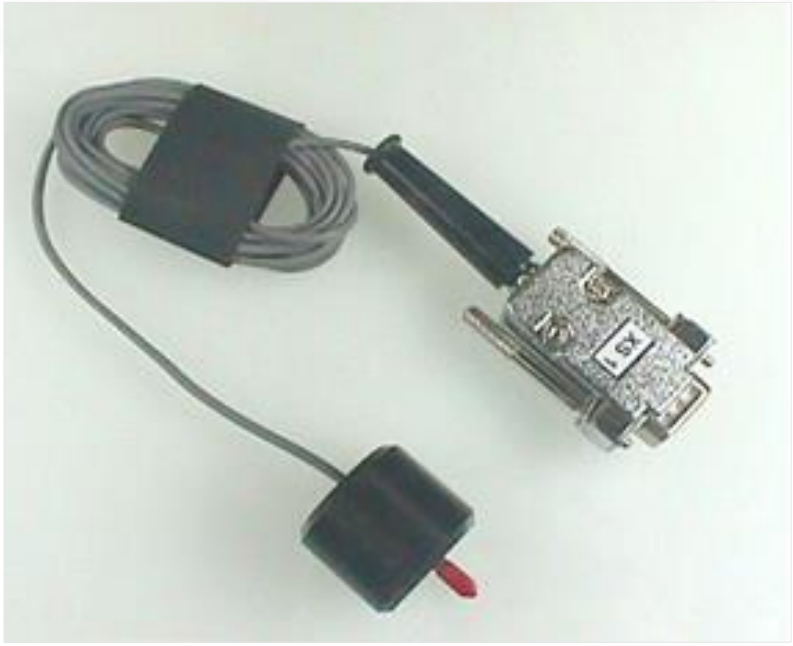

Technical Data	
Weight	0.06 kg
Electrical Connection	Standard male 9 pin D connector
Items supplied	97293 fingerswitch with integrated connector cable

IDH 142644

LOCTITE Fingerswitch for Pinch Valve

Application Field

The 97236 fingerswitch is designed to be used in conjunction with the LOCTITE Pinch Valve (IDH 88650).

Operation

An ergonomically designed fingerswitch connects directly to a Pinch Valve Pencil Applicator. This provides an ideal method for initiating a dispense cycle where trigger initiation is preferred.

The fingerswitch interfaces directly with standard Loctite control units by means of a ‘D’ plug connector.

Technical Data	
Weight	0.14 kg
Electrical Connection	Standard male 9 pin D connector
Items supplied	97236 fingerswitch with integrated connector cable

LOCTITE®

IDH 530015

LOCTITE Proximity Switch Stand (Inductive)

Application Field

The LOCTITE Proximity switch stand (Inductive) is designed to initiate a dispense cycle when the sensor is contacted by metal parts. The sensor is located in a fixture arrangement to enable parts to be presented in a consistent position to enable adhesive to be applied in the same position.

Operation

The LOCTITE Proximity switch stand (Inductive) is designed to be used in a semi automatic work environment where an operator presents a component into the 'vee' block, when the component is detected by the proximity switch the dispense cycle will be initiated. Adhesive will then be accurately applied from the dispense valve. The valve is sold separately.

Technical Data	
Weight	0.6 kg
Electrical connection	Standard male 9 pin D connector
Items supplied	Proximity stand and Inductive sensor (Valve must be ordered separately)

Click here to watch the demo video!

IDH 529887

LOCTITE Proximity Switch Stand (Capacitive)

Application Field

The LOCTITE Proximity switch stand (Capacitive) is designed to initiate a dispense cycle when the sensor is contacted by nonmetallic parts. The sensor is located in a fixture arrangement to enable parts to be presented in a consistent position to enable adhesive to be applied in the same position.

Operation

The LOCTITE Proximity switch stand (Capacitive) is designed to be used in a semi automatic work environment where an operator presents a component into the 'vee' block, when the component is detected by the proximity switch the dispense cycle will be initiated. Adhesive will then be accurately applied from the dispense valve. The valve is sold separately.

Technical Data	
Weight	0.6 kg
Electrical connection	Standard male 9 pin D connector
Items supplied	Proximity stand and Inductive sensor (Valve must be ordered separately)

Click here to watch the demo video!

Dispense Needles, Mixers and Accessories

Illustration / Example	Item No.	Order No.	Pack Size	Colour	Gauge	Inner Ø, mm
Flexible Dispensing Tips: Dispensing Needle, Polypropylene (PPF), Helical Thread						
	97229	142640	50 pcs	Amber	15	1.37
	97230	142641	50 pcs	Green	18	0.84
	97231	142642	50 pcs	Pink	20	0.61
	97232	142643	50 pcs	Red	25	0.25
Tapered Dispensing Tips: Dispensing Needle, Polyethylene – Conical (PPC), Luer-Lock						
	97221	88660	50 pcs	Grey	16	1.19
	97222	88661	50 pcs	Green	18	0.84
	97223	88662	50 pcs	Pink	20	0.61
	97224	88663	50 pcs	Blue	22	0.41
High Precision Dispensing Tips: Dispensing Needle, Stainless Steel Standard (SSS), Luer-Lock						
	97225	88664	50 pcs	Amber	15	1.37
	97226	88665	50 pcs	Green	18	0.84
	97227	88666	50 pcs	Pink	20	0.61
	97228	88667	50 pcs	Red	25	0.25

Additional Dispensing Tips and Mixer Nozzles

Illustration	Item No.	Order No.	Pack Size	Description
	98741	1146079	50 pcs	Dispensing needle, stainless steel – PTFE-lined (SSTL), 25 gauge
	97262	218288	2 each	Needle selection pack: 2 each of a variety of dispensing needles
	K1003100	88805	50 pcs	Formable dispensing tip, 21 gauge / 0.5 mm
	97248	218275	50 pcs	Luer-Lock® tip caps
	97233	88672	20 + 5 pcs	Luer-Lock® adapter kit: 20 Luer-Locks® and 5 adapters
	97207	88656	40 pcs	10 ml clear syringe barrel kit

Additional Dispensing Tips and Mixer Nozzles

Illustration	Item No.	Order No.	Pack Size	Description
	97283	529462	40 pcs	10 ml amber syringe barrel kit, for UV products
	97263	218287	40 pcs	10 ml black syringe barrel kit, for UV and light cure adhesives
	97208	88657	2 pcs	10 ml syringe airline adapter
	97244	88677	20 pcs	30 ml clear syringe barrel kit
	97264	218286	20 pcs	30 ml black syringe barrel kit, for UV and light cure adhesives
	97245	88678	2 pcs	30 ml syringe airline adapter
	97290	397462	50 pcs	All plastic precision dispensing tip, 20 gauge
	984569	1487440	10 pcs	Static mixer for epoxy and PU in 50 ml, SQ 5.3-24
	n.a.	2900614	10 pcs	Static mixer for epoxy and PU in 50 ml, SQ 24
	984570	1487439	10 pcs	Static mixer for epoxy in 200 / 400 ml, SQ 7.5-24
	1034575	1034575	10 pcs	Static mixer MBX 6.5-20-S 10:1 for LOCTITE AA 3038
	n.a.	2447734	10 pcs	Spray mix nozzle for LOCTITE PC 7255 MFQ-08-24C-13
	8953186	1104046	10 pcs	Static mixer 4:1 / 10:1 for 400 / 490 ml, MCX 08-18
	5289010	545996	10 pcs	Static mixer 1:1 for acrylics in 50 ml, MA 6.3-7
	98457	720174	10 pcs	Static mixer 1:1 / 2:1 in 200 / 400 ml, MC 8-24
	863585	367545	10 pcs	Static mixer 1:1 for MS polymers in 410 ml, MC 13-18
	8953187	1104047	10 pcs	Static mixer 4:1 / 10:1 in 400 / 490 ml, MCX 08-24
	8955989	1453183	10 pcs	Static mixer for LOCTITE 3090 and LOCTITE 4070, MLX 2.5-16-5
	n.a.	1826921	10 pcs	Static mixer 1:1 / 2:1 in 50 ml, MBH 3.2-16 S
	n.a.	1573153	10 pcs	Static mixer 1:1 / 2:1 in 50 ml, MBQ 5.0-24 L
	n.a.	1573135	10 pcs	Static mixer 1:1 / 2:1 in 400 ml, MFH 6.0-24 T

Volumetric Dispensing Systems – 1K

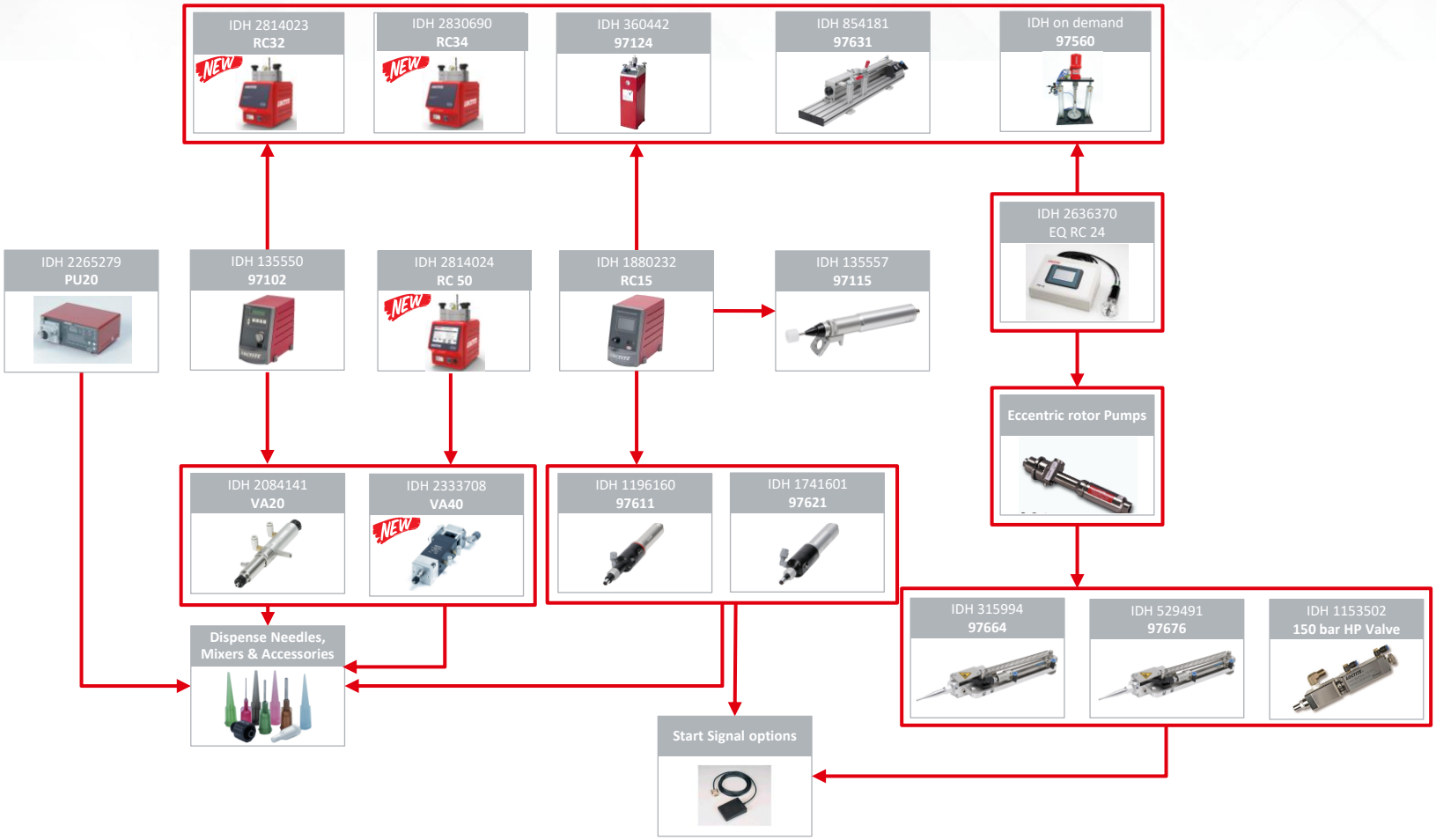

IDH 2814023

LOCTITE RC32 Automatic Reservoir SP

Application Field

The LOCTITE EQ RC32 Automatic Reservoir is equipped with a single point low level sensor that sends an electronic signal to a LOCTITE brand controller and is typically integrated into a dispensing system that consist of a dispensing valve and one of these controllers. The reservoir can be applied directly from the original 250 ml, 500 gr, 1 liter, 2 kg and 200 gr adhesive packages.

Product Features

- Modular design allows user to build suited application process
- Operational with manual, semi-automatic and automatic controllers
- Low level sensor alarm provides warning for adhesive bottle replacement
- Integrated solenoid vent valve

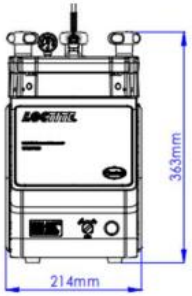

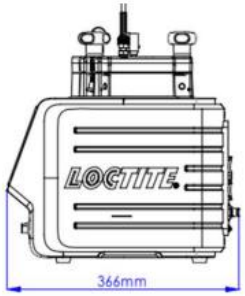

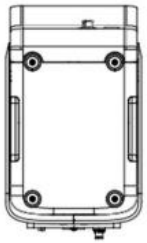

Technical Data	
Dimensions 0,5l	214 mm x 366 mm x 363 mm (W x D x H)
Weight	4.0 kg
Internal Control Voltages	24 VDC
Pneumatic Supply	Clean, dry air not exceed 8 bar (116 psi) and filtered with a maximum of 10 micron
Pneumatic Hose Size	External dia. 6 mm
Items supplied	Operation Manual, Reservoir Tank Fitting 1/4" NPT and tubing), Tank Cord, Bottle Holder, 1/4" NPT to 6 mm inlet supply line connector, Anti-bubbler Fitting and Tube Kit, Tube of silicone grease, Bottle spacer disc

LOCTITE®

IDH 2830690

LOCTITE RC34 Automatic Reservoir DP

Application Field

The LOCTITE EQ RC34 Automatic Reservoir DP is equipped with an analogue low level sensor that sends an electronic signal to a LOCTITE brand controller and is typically integrated into a dispensing system that consist of a dispensing valve and one of these controllers. The reservoir can be applied directly from the original 250 ml, 500 gr, 1 liter, 2 kg and 200 gr adhesive packages.

Product Features

- Modular design allows user to build suited application process
- Operational with manual, semi-automatic and automatic controllers
- Low level sensor alarm provides warning of low level and empty for adhesive bottle replacement
- Integrated solenoid vent valve

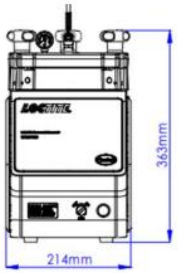

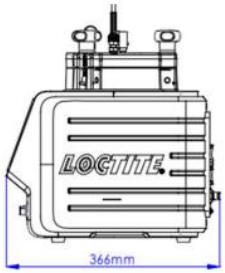

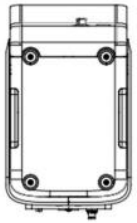

Technical Data	
Dimensions 0,5l	214 mm x 366 mm x 363 mm (W x D x H)
Weight	4.0 kg
Internal Control Voltages	24 VDC
Pneumatic Supply	Clean, dry air not exceed 8 bar (116 psi) and filtered with a maximum of 10 micron
Pneumatic Hose Size	External dia. 6 mm
Items supplied	Operation Manual, Reservoir Tank Fitting 1/4" NPT and tubing), Tank Cord, Bottle Holder, 1/4" NPT to 6 mm inlet supply line connector, Anti-bubbler Fitting and Tube Kit, Tube of silicone grease, Bottle spacer disc

LOCTITE®

IDH 2814024

LOCTITE RC50 Integrated Dispenser I4.0

Application Field

The LOCTITE PULSE EQ RC50 Integrated Semi-Automatic Dispenser combines both a dual channel dispense controller and a reservoir into a single unit. The dispenser provides two independent digital timing channels that provide control of two pneumatic outputs. These outputs can be used to control dispense valves or any other pneumatic device. The dispenser can be actuated either by the start/stop button on the front touch panel, a footswitch(included), or external start signal. It is capable of operating in a timed or continuous mode for dot or bead dispensing applications. The reservoir can accommodate 50 ml, 250 ml, 500 gr, 1 liter, 2 kg and 200 gr adhesive packages which deliver adhesive to dispensing valves. The reservoir is suitable for manual workstations as well as integration into automated production lines. The dispenser includes an integrated 'Industry 4.0' function to enable remote communication via Wi-Fi, Bluetooth or ethernet.

Product Features

- Controls up to two dispense valves
- Two independent digital timing channels
- Low level sensor alarm provides warning for adhesive bottle replacement
- Interface connections for customer's PLC to indicate reservoir low level condition and cycle complete signal
- User friendly HMI included with easy-to-use large touch panel for entering values
- Equipped with a 0 to 7 bar (0-100psi) digital pressure regulator (electronic proportional valve)
- Digital pressure gauge included
- Time range is adjustable from 0.01 to 99.99 seconds
- Timed and continuous mode options can be selected
- Manual button for purging adhesive from valves
- Powerful I4.0 function - Provides convenient remote user access in real time via Wi-Fi, Bluetooth, or Ethernet

Technical Data	
Dimensions	214 mm x 366 mm x 363 mm (W x D x H)
Weight	5.0 kg
Internal Control Voltages	24 VDC
Input Voltage	100-240 VAC, 50-60 Hz
Power Connections	Plug Ends for North America, Japan, Continental Europe, UK, Australia and China
Pneumatic Hose Size	External dia. 6 mm
Items supplied	Operation Manual, Universal Power AC Adapter, Footswitch, Reservoir Tank Fitting 1/4" NPT and tubing), Bottle Holder, 1/4" NPT to 6 mm inlet supply line connector, Anti-bubbler Fitting and Tube Kit, Bottle spacer disc

LOCTITE®

IDH 360442

LOCTITE 97124 2 L Bag Dispenser

Application Field

The Bag Reservoir 97124 is suitable for the application of LOCTITE adhesives with a dispensing valve at workstations such as in workshops, laboratories, and industrial installations.

Operation

The LOCTITE 97124 2l Bag Dispenser dispenses LOCTITE adhesive by air pressure. After a 2l bag package of LOCTITE adhesive has been loaded to the reservoir, it is pressurized from a LOCTITE Controller using clean, filtered dry air. The air pressure inside the vessel presses the product out of the bag package without mechanical stress. The dispensing pressure (regulated air from the controller) squeezes the bag and transports the product through the piercing element, the product fitting and the feedline to the dispensing valve. An integrated pneumatic cylinder presses a pusher plate against the bag in a controlled way. This action avoids twisting and closing of the bag.

Benefits

Considerable reduction of packaging waste by using a 2-litre product bag

- Automatic ventilation by solenoid valve in connection with controllers 97102 or 97152
- No contamination as product remains in original container

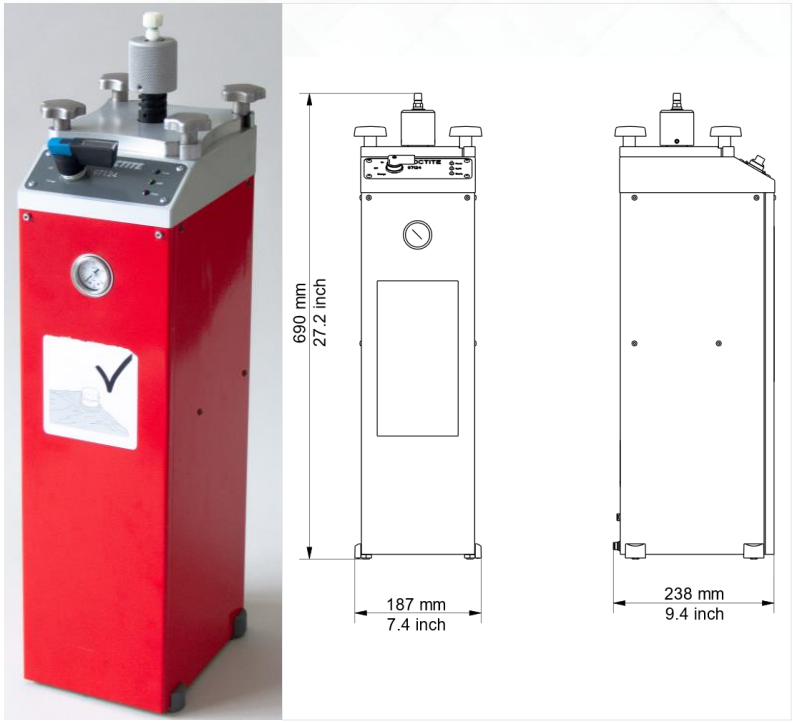

Technical Data	
Dimensions	187 mm (W) x 690 mm (H) x 238 mm (D)
Weight	13.0 kg
Pneumatic Supply	Min. 4 bar (58 PSI), max. 8 bar (115 PSI)
Pneumatic Quality	Filtered 10 µm, oil-free, non-condensing
Over-Pressure Safety	min. 9 bar (130.5 PSI); max. 12.5 bar (174 PSI)
(rupture disc)	Tightening torque of the rupture disc max. 20 Nm
Items supplied	97124 2L Bag Dispenser, Tank cord, Product fitting 1/4", Piercing element 5mm, Reservoir tubing set, Operating Manual

LOCTITE®

IDH 854181

LOCTITE 97631 300 ml Cartridge Dispenser

Application Field

The LOCTITE 97631 Cartridge Dispenser 97631 is used to dispense bubble minimized LOCTITE products in 300 ml cartridges such as Gel-CA, Anaerobics, Epoxies and Silicones. In connection with a dispensing valve or eccentric rotor pump it can be used in transfer lines, manual or automatic workplaces.

Operation

The LOCTITE 97631 300 ml Cartridge Dispenser should be pressurized from a LOCTITE controller with max. 4 bar (58 PSI). The piston of the pneumatic cylinder presses the product out of the cartridge and forces it through the feedline to the dispensing valve/eccentric rotor pump. When connected to a Controller 97152, the regulated air pressure is available at the unit when the controller is switched on. The piston can be switched to the forward position, "keep in position" or piston backwards. It will be depressurized automatically when the controller is switched off. No movement of the piston is possible.

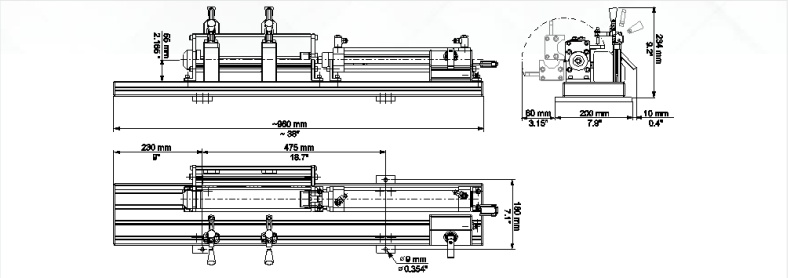

Technical Data	
Dimensions	960mm (L) x 210 mm (W) x 234 mm (H)
Weight	11.6 kg
Pneumatic supply	Regulated air pressure (I) from the controller
Pressure input limit	max. 4 bar (58 PSI)
(maximum feed pressure)	
Pneumatic Hose	OD 6 mm , ID 4 mm
Product Feedline	Standard OD ⅜"
Product Fitting Thread	Standard G ⅜"
Items supplied	300ml Cartridge dispenser, Pushers (for Al, Semco, Ritter & Fischbach cartridges), Adaptors (for Al, Semco, Ritter & Fischbach cartridges), OD 6mm airline x 2m, Sleeve for Al cartridge, Operating Manual

IDH on demand

LOCTITE 97560 Extrusion Pump 26:1

Application Field

The Extrusion Pump 26:1 is a high-pressure pneumatic pump used for extrusion and transfer of high viscous and paste products. The pump is essentially constituted of an air motor and the pumping group, mounted on a ram. In the air motor, compressed air causes the vertical reciprocating movement of the motor piston; this movement is transmitted through a connecting rod to the material pumping piston ending with a shovel plate allowing to suck very viscous products. The shovel plate (follower plate) is supplied with a series of gaskets able to protect the product contained in the pail from powder, moisture and drying process caused by the touch with air. The use of the ram enables to drive the sucking unit of the pump during the product intake phase directly into the 20 ℓ pails. The ram can automatically compensate the shovel plate descent during the use of the product. This system allows lifting of the extrusion pump for a quick replacement of the pail when it is empty. The ratio 26:1 means that the outlet pressure of product is 26 times higher than the pump feed air pressure. In order to ensure best product compatibility, the pumping group and sealing balls are made from stainless steel.

Please consult TCS Experts for further information (Level 3 Support)!

Technical Data	
Dimensions	800 mm (L) x 600 mm (W) x 1800 mm (H)
Weight	67 kg
Pneumatic supply	Max. 7 bar (100 psi)
Pressure input min	max. 3.5 bar (50 psi)
Material Outlet	G 3/4“ female
Maximal Output Pressure	182 bar (2730 psi) for 26:1
Max product flow rate	4 liter/min (26:1)

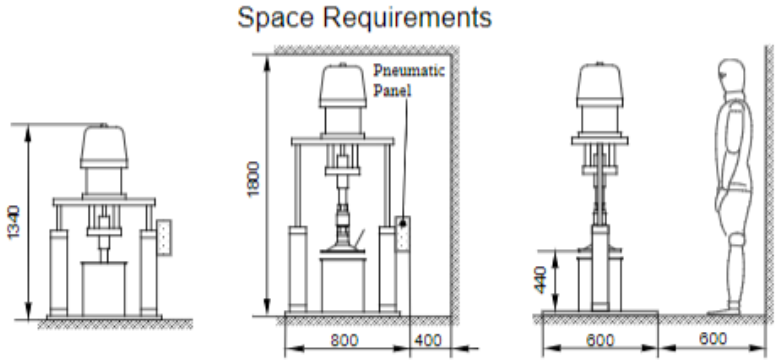

LOCTITE®

IDH 135550

LOCTITE 97102 Semi-Automatic Controller

Application Field

The Semi-Automatic Controller 97102 controls the exact application of LOCTITE Products from a product reservoir by means of a dispensing valve.

Operation

The LOCTITE 97102 semi-automatic controller has been designed for precision dispensing. The digital pressure display and digital time ranging from 0.04 to 99.9 seconds allows the operator to make pin-point accurate deposits when applying a wide range of fluids from low to high viscosity. This controller can be interfaced with various LOCTITE reservoirs and valves to make a complete dispensing system. The semi-automatic controller controls the selected dispensing pressure in the reservoir and the pneumatic operation of the dispense valve according to the selected dispensing time. The start signal for dispensing is provided by an external footswitch or fingerswitch. Error messages are shown on a digital display and are accompanied by an audible alarm.

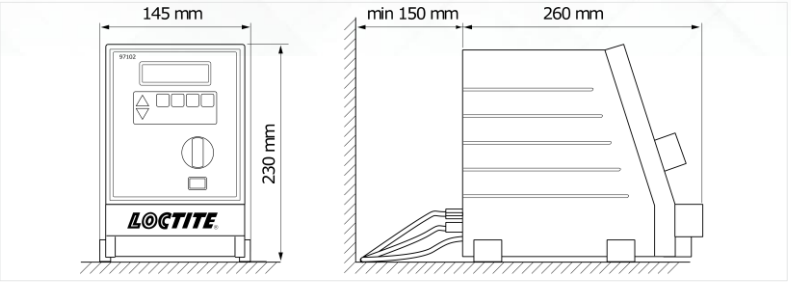

Technical Data	
Dimensions	145 mm (W) x 230 mm (H) x 260 mm (D)
Weight	2.8 kg
Power Supply	90 – 260 VAC; 47 – 63 Hz
Power Consumption	Approx. 40 W
Compressed Air Supply	min. 2 bar (29 psi); max. 12 bar (174 psi)
Pneumatic Hose	
▪ **Control Air Connection O.D.**	6 mm +0.05 -0.10
▪ **Dispensing Valve O.D.**	4 mm +0.05 -0.10
▪ **Reservoir O.D.**	6 mm +0.05 -0.10
Continuous Sound Pressure Level	< 70 dB(A)
Items supplied	97102 Semi-Auto Controller, Power cord, Pneumatic tubing OD 6mm x 1.2m, Operating Manual

Click here to watch the demo video!

IDH 1880232

LOCTITE EQ RC15 Compact Rotor Pump Controller

Application Field

LOCTITE EQ RC15 Compact Rotor Pump Controller provides all control required for both the 97611 and 97621 Compact Rotor Pumps. This controls all the dispensing parameters such as; Pump speed, volume dispense, reservoir pressure and Rotorspray control (if used). The application field depends on the supplementary equipment.

Operation

The EQ RC15 unit controls the drive of a connected rotor pump in a way that a precise dosage is made upon a simple digital start signal.

For different dosing applications it is possible to store up to 3 programs in the RC15 controller. These can be accessed via separate digital start signals of a higher-ranking controller.

The EQ RC15 controller provides digital output signals to the higher-level controller to indicate the status of the dosing system as well as the level of the reservoir. For manual workstations without higher level control, the EQ RC15 system can be started with a simple foot switch. The status is shown on the display with easy to understand, user friendly icons. Dosing parameters can be adjusted via the graphical user interface depending on the operating mode: flow rate for dispensing, dispensing quantity or dispensing time.

Benefits

Menu navigation is easy and allows users to select either the amount of product dispensed (in ml) or the dispense rate (in ml / min)

- High accuracy +/-1%
- Reversible direction of flow (suck-back) allows for an exact stoppage of the product flow
- Useful for all kinds of applications: drops, beads, potting

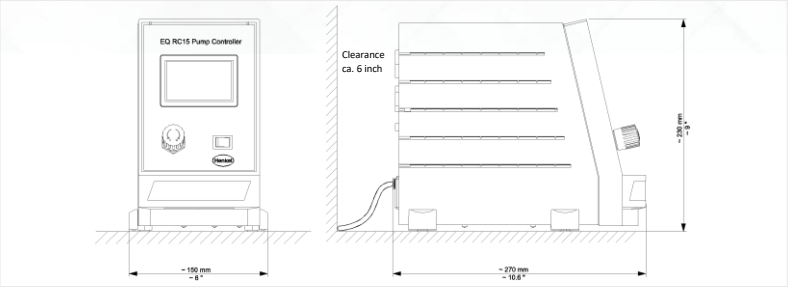

Technical Data	
Weight	~ 2.3 kg
Compressed air supply	min. 4 bar (72 PSI), max. 6 bar (116 PSI)
Pneumatic Quality	filtered 10 µm, oil-free, non-condensing
Power Supply	110 – 240V AC 50/60 Hz, 100 W
Pneumatic hose, control air connection O.D.	6 mm
Pneumatic Hose, reservoir connection O.D.	6 mm
Items supplied	EQ RC15 Compact Rotor Pump Controller, Power cord, operation manual, airline 6 mm, calibration pipette

Click here to watch the demo video!

IDH 135557

LOCTITE 97115 Rotorspray

Application Field

LOCTITE 97115 Rotospray is used to apply LOCTITE products to the interior cylindrical surfaces of work pieces. The Rotorspray is designed for anaerobic adhesives.

Operation

The Rotorspray 97115 is used in conjunction with a dispense valve to apply Loctite anaerobic adhesives. The dispensing valve is clamped in the holder of the Rotorspray so that the tip of the flexible dispensing needle is directed to the inside of the wetting holes on the rotor disk. The LOCTITE Controller 97152 must control: Switching on/off of the Rotorspray and the preselected dispensing time after the rated rotor speed is reached.

As long as the dispensing valve is open, the product is dispensed through the wetting holes by centrifugal force and uniformly distributed onto the cylindrical inner surface of the part.

In conjunction with an advancing slide, reaching the end of the advancing movement triggers the dispensing.

The head of the Rotorspray has a longitudinal play of 5 mm. Within this distance, unintentional contact with an obstacle can be compensated without the rotor disk or the drive assembly and its shaft being damaged.

Benefits

- Accurate, controlled spray pattern
- High speed rotation for large and small rotor disks
- Fail to spin alarm

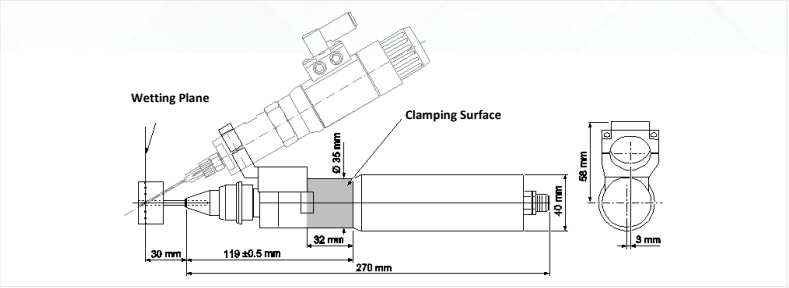

Technical Data	
Weight	0.530 kg
Standard Rotational speed	8,000 rpm
Adjustable Speed Range	3,500 – 8,000 rpm in steps of 500 rpm
Power Consumption	Constant current ~ 0.2 A, Starting-up current up to 2 A W
Adjustable starting-up current	2 A
Rated monitored time to reach speed	0.5 sec
Adjustable monitored time to reach speed	No limit
Rated voltage Safety extra low	24 V DC
Items supplied	97115 Rotorspray, Rotor disk 10 mm & 25 mm, rotor cord, operation manual, different mounting clamps for all valves/pumps

Click here to watch the demo video!

IDH 2265279

LOCTITE EQ PU20 Digital Peristaltic Dispenser

Application Field

Anaerobic, cyanoacrylate and light cure adhesives in 10ml, 20g, 30ml and 50ml packs. Solvent-free activators and oils up to a viscosity of approx. 5,000 mPa·s. The LOCTITE EQ PU20 Digital Peristaltic Dispenser is ideal for dispensing adhesives from bottles. The peristaltic motion of the rotor provides volumetric dispensing of the material directly from a bottle or similar container.

Operation

The LOCTITE EQ PU20 Digital Peristaltic Dispenser transfers low viscosity liquids by pressure displacement applied by a turning rotor against a tube carrying the material. Usually these pumps are chosen because the liquids are hazardous or difficult to work with and it is advisable to limit operator contact. Another reason is that peristaltic pumps are air free. Dispense outputs can be timed from 0.01 - 99.99 seconds with flow speeds from 0.01 - 6 ml/min using PTFE tubing. The pump is bi-directional allowing suck-back after dispense to prevent dripping of the fluid. When dispensing Light Cure adhesives use only black tubing. This avoids curing of the adhesive in the tube.

The amount of product dispensed is controlled by: the dispensing time, the size of the used feedline and the speed of the drive.

Benefits

- Air-free dispensing eliminates air in the adhesive.
- Forward and reverse motion of rotor.
- Instant reverse for vacuum suck-back; shuts off the flow of liquid and prevents dripping.
- Adjustable post-delay time for vacuum setting.
- Simple and convenient load mechanism for tubing replacement.
- Digital motor speed adjustment and display
- Digital timer display
- “Teach In” and program memory saving function.

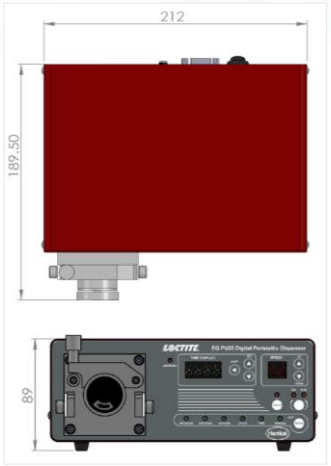

Technical Data	
Power Supply	110/220 VAC; 50/60 Hz.
Weight	3.0 kg
Dispense time range	0.01 - 99.99 seconds
Maximum Flow Rate	Up to 6 ml/min
Direction of Rotation	Clockwise (CW) or Counterclockwise (CCW)
Dimensions	212 W x 89 H x 189.5 D (mm)
Suck-back	Programmable by reversing the direction of rotor
Items supplied	1 PU20 Digital Peristaltic Dispenser
	1 Manual Applicator (IDH # 2737712)
	1 Operation Manual
	1 Tip Adapter 1.6mm (IDH # 2312595)
	1 Tip Adapter 2.0mm (IDH # 2312300)
	1 Tip Adapter 2.5mm (IDH # 2312298)
	1 Tip Adapter 3.2mm (IDH # 2312299)
	Tubing, Black, 1.4mmx0,3mm Wall x 1.0 Long
	Tubing, Black, 1.0mmx0,3mm Wall x 1.0 Long
	Tubing, White, 1.4mmx0,3mm Wall x 1.0 Long
	Tubing, White, 1.0mmx0,3mm Wall x 1.0 Long

LOCTITE®

Click here to watch the demo video!

IDH 2636370

LOCTITE EQ RC24 Volumetric Dispense System

Application Field

The LOCTITE EQ RC24 is a Controller and Servo drive designed to operate the Loctite Eccentric Rotor Pumps. The lightweight design makes it ideal for mounting to an EQ RB40 Benchtop Robot.

Operation

The pump system EQ RC24 consists of a control unit in a casing as well as a brushless servomotor planetary gear combination with supply and signal lines.

The EQ RC24 allows a dosing either by the touch display or by interface via external circuit.

The following operation modes are available:

- Dosing via Start/Stop operation
- Volumetric dosing

In both operating modes, the retraction is adjustable and the calibration function enables an exact adjustment of the used pump.

The parameters for four pump types can be stored in the control unit.

Technical Data	
Dimensions	198 x 290 x 120 / 56 mm
Weight	4 kg (Servo drive)
Supply Voltage	230V/50Hz
Items supplied	EQ RC24 Control Unit, Servo Drive, 5m Control line & 5m Supply line

IDH 1741601

LOCTITE 97621 Volumetric Rotor Pump 1.0

Application Field

LOCTITE 97621 Volumetric Rotor Pump 1.0 is a precision volumetric dispenser for accurate dispensing applications with flow rates from 120 to 1.480 µL/min. It is designed for anaerobic, light cure and acrylic adhesives.

Operation

The dispenser uses a rotating displacement consisting of a rotor and a stator. A number of voids are produced as a result of the various geometries of the conveying elements. Conveying of adhesive is proportional to the angle of rotation and speed of rotation of the rotor within the stator. Since the direction of flow is reversible, the adhesive can be sucked back to allow a clean break of the product.

Benefits

- High repeatability
- High accuracy +/-1%
- Reversible direction of flow (suck-back) allows for an exact stoppage of the product flow
- Useful for all kinds of applications: drops, beads, potting

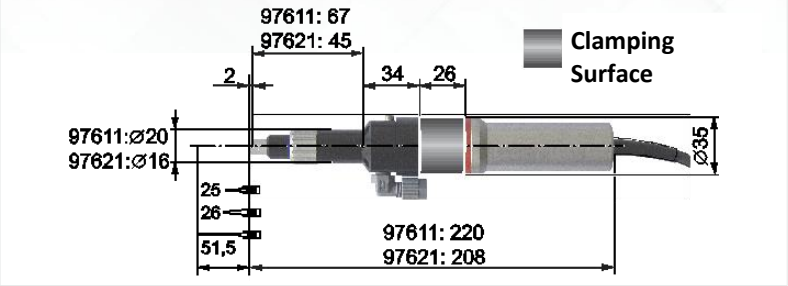

Technical Data	
Dimensions	206 mm (L) x Ø 33 mm
Weight	0.380 kg
Minimum Quantity	0.001 ml (1 µl)
Accuracy	±1%
Flow Rate	120 to 1.480 µl/min
Input Pressure	0 - 6 bar
Max. Dispensing Pressure	16 bar
Intrinsic Tightness	ca. 2 bar
Items supplied	97621 Volumetric Rotor Pump 1.0, Operation manual, 1/4" feedline, mounting tools

Click here to watch the demo video!

IDH 1196160

LOCTITE 97611 Volumetric Rotor Pump 4.0

Application Field

LOCTITE 97611 Rotor Dispenser 4.0 is a precision volumetric dispenser for accurate dispensing applications with flow rates from 500 to 6,000µL/min. It is designed for anaerobic, light cure and acrylic adhesives.

Operation

The dispenser uses a rotating displacement consisting of a rotor and a stator. A number of voids are produced as a result of the various geometries of the conveying elements. Conveying of adhesive is proportional to the angle of rotation and speed of rotation of the rotor within the stator. Since the direction of flow is reversible, the adhesive can be sucked back to allow a clean break of the product.

Benefits

- High repeatability
- High accuracy +/-1%
- Reversible direction of flow (suck-back) allows for an exact stoppage of the product flow
- Useful for all kinds of applications: drops, beads, potting

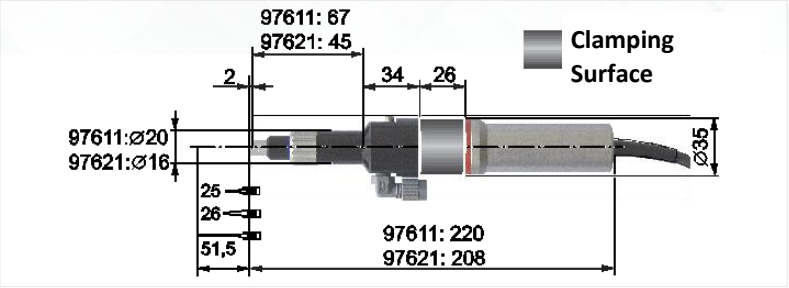

Technical Data	
Dimensions	220 mm (L) x Ø 35 mm
Weight	0.300 kg
Minimum Quantity	0.004 ml (4 µl)
Accuracy	±1%
Flow Rate	500 to 6.000 µl/min
Input Pressure	0 - 6 bar
Max. Dispensing Pressure	16 to 20 bar
Intrinsic Tightness	ca. 2 bar
Items supplied	97611 Volumetric Rotor Pump 4.0, Operation manual, 1/4" feedline, mounting tools

Click here to watch the demo video!

IDH 2084141

LOCTITE EQ VA20 Volumetric Dispense Valve

Application Field

The LOCTITE EQ VA20 is specifically design to dispense drops of LOCTITE Light Cure Adhesives with precise dosing in the range of 1.5 to 12 microliters.

Operation

The LOCTITE EQ VA20 Volumetric Valve is a positive displacement metering valve which dispenses a precise volumetric drop of adhesive with each cycle. The EQ VA20 is designed with a flooded chamber and a single check valve that allows for quick priming and minimizes the need for re-priming. The priming system utilizes a patent pending check valve design which improves the speed and reliability of priming. The innovative displacement rod and seal of the VA20 design provide long dispensing life before rebuild is needed.

Benefits

- Stroke adjusted positive displacement independent of external influences such as pressure, viscosity, and temperature
- Quick and reliable priming
- Long Life, >1Million cycles
- Stackable configuration on 19mm centers
- Tool free fluid line hook up that can be oriented 360°

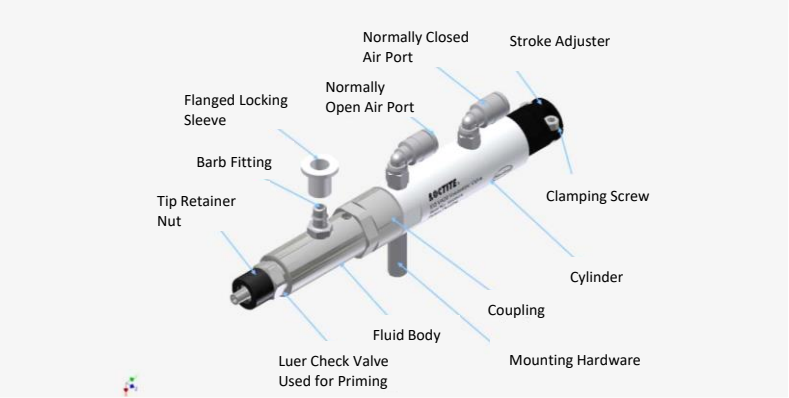

Technical Data	
Dimensions	153mm (L) x 19 mm (D)
Weight	0.13 kg
Viscosity Range	1 to 10.000 mPas
Operating Air Pressure	4 to 7 bar [60 -100 Psi]
Operating Product Pressure	2 to 5 bar [30 to 70 Psi]
Items supplied	EQ VA20 Volumetric Dispense valve, Needle kit, operation manual, feedline, 2 x airline 4 mm,

IDH 2333708

LOCTITE EQ VA40 CA Volumetric Valve

Application Field

The LOCTITE EQ VA40 CA Volumetric Valve is a positive displacement metering valve which dispenses a precise volumetric drop of adhesive with each cycle. The LOCTITE EQ VA40 is specifically design to dispense drops of Cyanoacrylate with precise dosing in the range of 1.5 to 6 microliters.

Operation

The EQ VA40 utilizes a flooded chamber and a single check valve that allows for quick priming and minimizes the need for re-priming. The priming system uses a patent pending check valve design which improves the speed and reliability of priming. The innovative displacement rod and sealing system of the VA40 design provide long dispensing life before rebuild is needed.

Benefits

- Volumetric displacement quick and reliable priming
- Dosing range, 1.5 – 6 microliters Stackable configuration on 19mm centres
- Cycle rate, 120/minute
- Adjustable Stroke
- Positive displacement is independent of external influences such as pressure, viscosity, and temperature.
- Quick and reliable priming
- Long Life > 1Million cycles

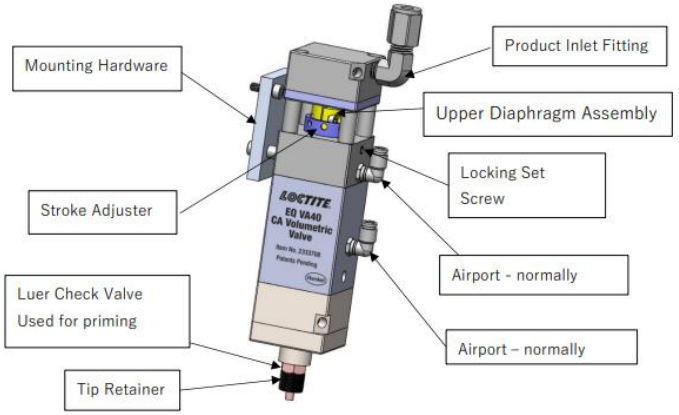

Technical Data	
Dimensions	1.5” x 1.5”x 7.0“
Weight	0.8 kg
Viscosity Range	1 to 10.000 mPas
Operating Air Pressure	4 to 7 bar [60 -100 Psi]
Operating Product Pressure	2 to 5 bar [30 to 70 Psi]
Items supplied	EQ VA40 CA Volumetric Valve, Needle kit, operation manual, PTFE lined feedline, 2 x airline 4 mm

IDH (various)

LOCTITE Eccentric Rotor Pumps RD-EC Series

Application Field

The Eccentric Rotor Pump is ideally suited for volumetric dispensing of materials ranging from anaerobic adhesives and sealants to very pasty silicones.

Operation

The direction of flow is reversible and the dispensed amount proportional to speed of rotation, i.e. the system allows for continuously variable adjustment of the dispensing rate via motor speed adjustment. The drive shaft is sealed by two double acting sealing rings made of UHMW-PE and PTFE; it is fitted with a barrier liquid connection.

Eccentric Rotor Pumps are positive displacement pumps providing volumetric dispensing and a nearly pulsation free flow of material.

Volume flow depends on the size of the pump and the number of revolutions. The pumps can be driven by either a digital AC servo drive or a DC drive. Pump and drive are fixed together with a mounting clamp for fast assembly and disassembly.

Technical Specifications

	1997132	1997130/1997123	1997131
Item #	97660	97663/97669	97665
Approved LOCTITE products – silicones	5900, 5970	5083, 5699, 5900, 5910, 5960, 5970	
Approved LOCTITE products – anaerobics	-	**97669 only:** 510, 518, 5203 5205, 5206, 5209	510, 518, 5203 52085, 5206, 5209
Maximum Inlet Pressure	20 bar dynamic, 30 bar static		
Dispensing rate for LOCTITE 5900	3.0g/s at 20°C 150rpm 3mm nozzle	0.6g/s at 20°C 150rpm 2mm nozzle	0.3g/s at 20°C 200rpm 2mm nozzle
Dispensing rate for anaerobic gasketing compounds		**97669 only:** 0.5g/s at 20°C 150rpm 2mm nozzle	0.3g/s at 20°C 200rpm 1.5mm nozzle
Stator Material	EPDM*	97663: EPDM 97669: VisChem	VisChem

IDH 315994

LOCTITE 97664 Shut-Off Valve for Silicones

Application Field

The 97664 Shut-Off Valve is designed for dispensing LOCTITE silicones.

Operation

The LOCTITE 97664 Shut-off Valve for Silicones is used in combination with an Eccentric Rotor Pump for dispensing silicones. It opens and shuts by a double acting cylinder. Additionally, if the air supply is switched off it closes by spring force. This prevents the running out of the adhesive. The valve is mounted directly at the rotor pump. Different dispensing nozzles are available according to the application. A pressure sensor for monitoring the dispensing can be mounted directly to the Shut-Off valve.

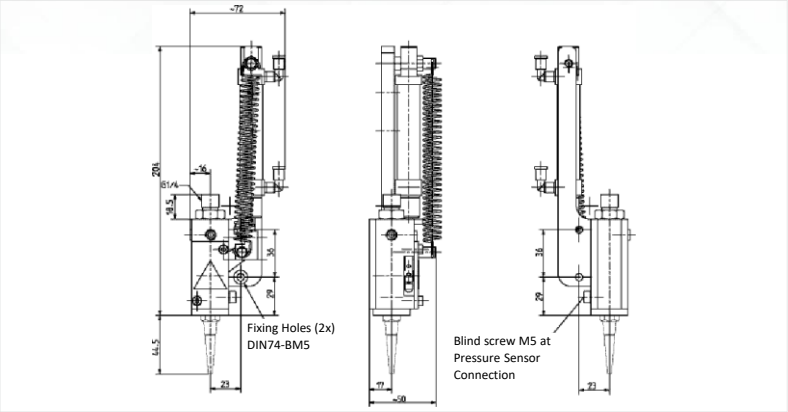

Technical Data	
Weight	0.6 kg
Pneumatic Supply	min. 5 bar (73 PSI) – max. 10 bar (145 PSI)
Pneumatic Tube Size	External Dia. 4 mm, internal Dia. 2.5 mm
Connection Thread Feedline/Pump	G ¼"
Max. Product Pressure	40 bar (580 psi)
Quality of Air Pressure	Filtered oil-free or filtered oiled
Items supplied	97664 Shut-Off valve (Needle must be ordered separately)

LOCTITE®

IDH 529491

LOCTITE 97676 Shut-Off Valve for Anaerobics

Application Field

The 97676 Shut-Off Valve is designed for dispensing LOCTITE anaerobic adhesives.

Operation

The LOCTITE 97676 Shut-off Valve for Anaerobics is used in combination with an Eccentric Rotor Pump for dispensing Anaerobic adhesives. It opens and shuts by a double acting cylinder. Additionally, if the air supply is switched off it closes by spring force. This prevents the running out of the adhesive. The valve is mounted directly at the rotor pump. Different dispensing nozzles are available according to the application. A pressure sensor for monitoring the dispensing can be mounted directly to the Shut-Off valve.

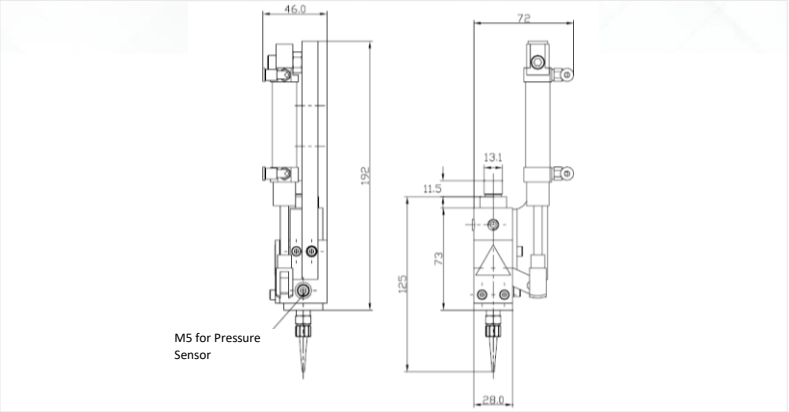

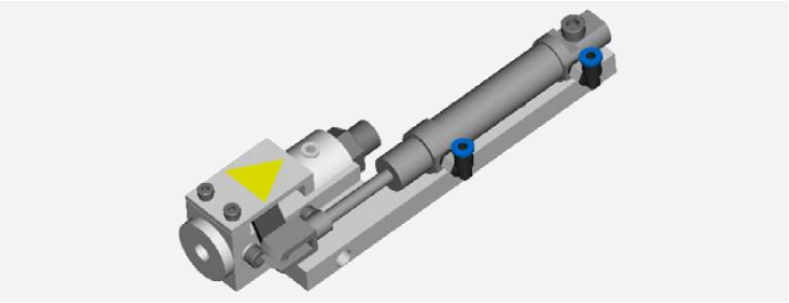

Technical Data	
Weight	0.5 kg
Pneumatic Supply	min. 5 bar (73 PSI) – max. 10 bar (145 PSI)
Pneumatic Tube Size	External Dia. 4 mm, internal Dia. 2.5 mm
Connection Thread Feedline/Pump	G ¼"
Max. Product Pressure	40 bar (580 psi)
Quality of Air Pressure	Filtered oil-free or filtered oiled
Items supplied	97676 Shut-Off valve (Needle must be ordered separately)

LOCTITE®

IDH 1153502

LOCTITE High Pressure 150bar/3mm Dispense Valve

Application Field

The 1153502 High pressure 150bar/3mm Dispense Valve is designed for dispensing LOCTITE silicones at high pressure.

Operation

The LOCTITE High Pressure Dispense Valve is a double-acting dispense valve that is used to dispense high viscosity adhesives when pumped from pail and drum pump systems. This stainless steel dispense valve is compatible with silicones, MS polymers, and urethane products. It features suck-back capability and can operate at fluid pressures up to 2175 psi. (150 bar).

- Handles high viscosity adhesives approx. 500,000 to 2,000,000 mPas
- Stainless steel valve ensures long term, durable dispensing performance
- Bubble-free, no-drip dispensing with suck-back control
- Lightweight and durable; can be mounted or comfortably handheld
- High resolution stroke adjustment
- Double acting - air to open; air to close
- Operates at fluid pressures up to 2175 psi. (150 bar)

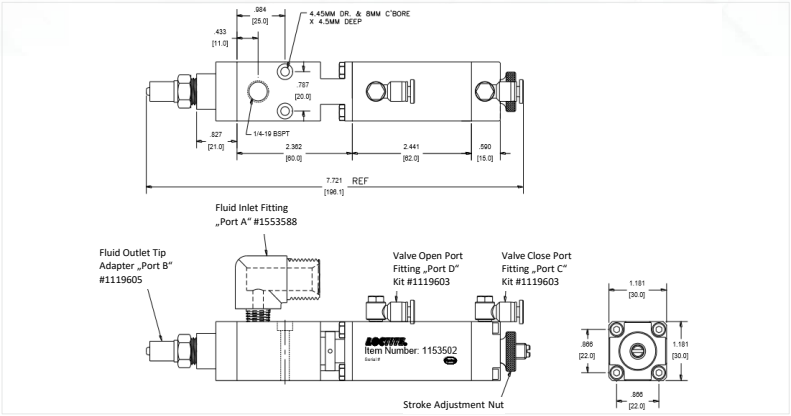

Technical Data	
Weight	0.68 kg
Pneumatic Supply	min. 4 bar (55 PSI) – max. 6 bar (85 PSI)
Pneumatic Tube Size	External Dia. 4 mm, internal Dia. 2.5 mm
Max. Product Pressure	150 bar (2185 psi)
Quality of Air Pressure	Filtered oil-free or filtered oiled
Items supplied	150 bar dispense valve, Fluid inlet/outlet fittings, air input fitting, 2 metre airline (Needles must be ordered separately)

IDH 88653

LOCTITE Footswitch

Application Field

The LOCTITE Footswitch is designed for to initiate LOCTITE Dispense and Curing equipment.

Operation

The LOCTITE Footswitch is used in combination with LOCTITE Dispense and Curing equipment. It connects to the equipment via a standard Male 9 pin D connector.

It provides a start signal to each dispense/cure equipment and enables the operator to keep hands free for other assembly tasks.

Technical Data	
Weight	0.6 kg
Electrical connector	Standard male 9 pin D connector
Items supplied	97201 Footswitch

LOCTITE®

Dispense Needles, Mixers and Accessories

Illustration / Example	Item No.	Order No.	Pack Size	Colour	Gauge	Inner Ø, mm
Flexible Dispensing Tips: Dispensing Needle, Polypropylene (PPF), Helical Thread						
	97229	142640	50 pcs	Amber	15	1.37
	97230	142641	50 pcs	Green	18	0.84
	97231	142642	50 pcs	Pink	20	0.61
	97232	142643	50 pcs	Red	25	0.25
Tapered Dispensing Tips: Dispensing Needle, Polyethylene – Conical (PPC), Luer-Lock						
	97221	88660	50 pcs	Grey	16	1.19
	97222	88661	50 pcs	Green	18	0.84
	97223	88662	50 pcs	Pink	20	0.61
	97224	88663	50 pcs	Blue	22	0.41
High Precision Dispensing Tips: Dispensing Needle, Stainless Steel Standard (SSS), Luer-Lock						
	97225	88664	50 pcs	Amber	15	1.37
	97226	88665	50 pcs	Green	18	0.84
	97227	88666	50 pcs	Pink	20	0.61
	97228	88667	50 pcs	Red	25	0.25

Additional Dispensing Tips and Mixer Nozzles

Illustration	Item No.	Order No.	Pack Size	Description
	98741	1146079	50 pcs	Dispensing needle, stainless steel – PTFE-lined (SSTL), 25 gauge
	97262	218288	2 each	Needle selection pack: 2 each of a variety of dispensing needles
	K1003100	88805	50 pcs	Formable dispensing tip, 21 gauge / 0.5 mm
	97248	218275	50 pcs	Luer-Lock® tip caps
	97233	88672	20 + 5 pcs	Luer-Lock® adapter kit: 20 Luer-Locks® and 5 adapters
	97207	88656	40 pcs	10 ml clear syringe barrel kit

Additional Dispensing Tips and Mixer Nozzles

Illustration	Item No.	Order No.	Pack Size	Description
	97283	529462	40 pcs	10 ml amber syringe barrel kit, for UV products
	97263	218287	40 pcs	10 ml black syringe barrel kit, for UV and light cure adhesives
	97208	88657	2 pcs	10 ml syringe airline adapter
	97244	88677	20 pcs	30 ml clear syringe barrel kit
	97264	218286	20 pcs	30 ml black syringe barrel kit, for UV and light cure adhesives
	97245	88678	2 pcs	30 ml syringe airline adapter
	97290	397462	50 pcs	All plastic precision dispensing tip, 20 gauge
	984569	1487440	10 pcs	Static mixer for epoxy and PU in 50 ml, SQ 5.3-24
	n.a.	2900614	10 pcs	Static mixer for epoxy and PU in 50 ml, SQ 24
	984570	1487439	10 pcs	Static mixer for epoxy in 200 / 400 ml, SQ 7.5-24
	1034575	1034575	10 pcs	Static mixer MBX 6.5-20-S 10:1 for LOCTITE AA 3038
	n.a.	2447734	10 pcs	Spray mix nozzle for LOCTITE PC 7255 MFQ-08-24C-13
	8953186	1104046	10 pcs	Static mixer 4:1 / 10:1 for 400 / 490 ml, MCX 08-18
	5289010	545996	10 pcs	Static mixer 1:1 for acrylics in 50 ml, MA 6.3-7
	98457	720174	10 pcs	Static mixer 1:1 / 2:1 in 200 / 400 ml, MC 8-24
	863585	367545	10 pcs	Static mixer 1:1 for MS polymers in 410 ml, MC 13-18
	8953187	1104047	10 pcs	Static mixer 4:1 / 10:1 in 400 / 490 ml, MCX 08-24
	8955989	1453183	10 pcs	Static mixer for LOCTITE 3090 and LOCTITE 4070, MLX 2.5-16-5
	n.a.	1826921	10 pcs	Static mixer 1:1 / 2:1 in 50 ml, MBH 3.2-16 S
	n.a.	1573153	10 pcs	Static mixer 1:1 / 2:1 in 50 ml, MBQ 5.0-24 L
	n.a.	1573135	10 pcs	Static mixer 1:1 / 2:1 in 400 ml, MFH 6.0-24 T

Pressure-Time Dispensing Systems – 2K

IDH 135550
97102

On request
(3 types available)
MM10

Start Signal Options

Dispense Needles, Mixers & Accessories

IDH 135550

LOCTITE 97102 Semi-Automatic Controller

Application Field

The Semi-Automatic Controller 97102 controls the exact application of LOCTITE Products from a product reservoir by means of a dispensing valve.

Operation

The LOCTITE 9712 semi-automatic controller has been designed for precision dispensing. The digital pressure display and digital time ranging from 0.04 to 99.9 seconds allows the operator to make pin-point accurate deposits when applying a wide range of fluids from low to high viscosity. This controller can be interfaced with various LOCTITE reservoirs and valves to make a complete dispensing system. The semi-automatic controller controls the selected dispensing pressure in the reservoir and the pneumatic operation of the dispense valve according to the selected dispensing time. The start signal for dispensing is provided by an external footswitch or fingerswitch. Error messages are shown on a digital display and are accompanied by an audible alarm.

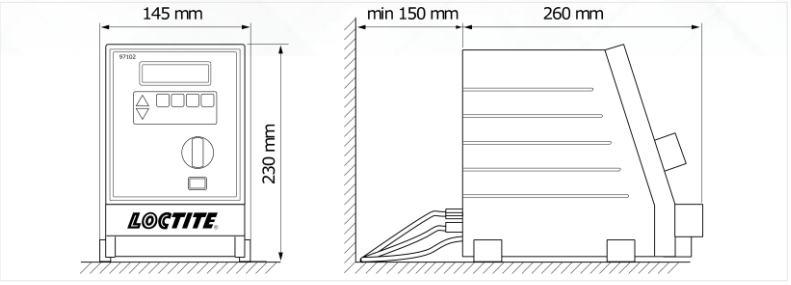

Technical Data	
Dimensions	145 mm (W) x 230 mm (H) x 260 mm (D)
Weight	2.8 kg
Power Supply	90 – 260 VAC; 47 – 63 Hz
Power Consumption	Approx. 40 W
Compressed Air Supply	min. 2 bar (29 psi); max. 12 bar (174 psi)
Pneumatic Hose	
▪ **Control Air Connection O.D.**	6 mm +0.05 -0.10
▪ **Dispensing Valve O.D.**	4 mm +0.05 -0.10
▪ **Reservoir O.D.**	6 mm +0.05 -0.10
Continuous Sound Pressure Level	< 70 dB(A)
Items supplied	97102 Semi-Auto Controller, Power cord, Pneumatic tubing OD 6mm x 1.2m, Operating Manual

Click here to watch the demo video!

IDH on demand (see table)

LOCTITE EQ MM10 50 ml Dual Cartridge Dispenser

Application Field

The LOCTITE MM10 Dual Cartridge Dispenser is designed for 2K epoxy and Hybrid products in 50ml cartridges.

Operation

The LOCTITE MM10 Dual Cartridge Dispenser provides highly accurate control for applying drops or small beads of 2-part adhesives with a 1:1 & 2:1 mix ratio from "A" style cartridges. This 50 ml Dual Cartridge Dispenser can be used as a stationary dispenser or can be integrated into LOCTITE Precision Adhesive Dispensing Robots. Interchangeable cartridge pusher with common mounting tooling can accommodate 1:1, 2:1, or 10:1 dual cartridges for both A-System and B-System 50 ml cartridges.

Benefits

- Independent cartridge pressure and actuation controls to fine-tune adhesive flow rate
- Light-weight design; able to be used on any LOCTITE Precision Adhesive Dispensing Robots, excluding the 200D Benchtop Robot, or as a stationary applicator
- Dispenses adhesives up to 200,000 mPas viscosities

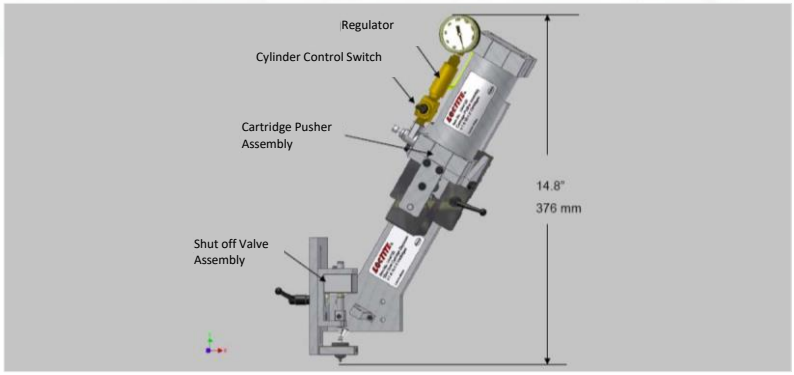

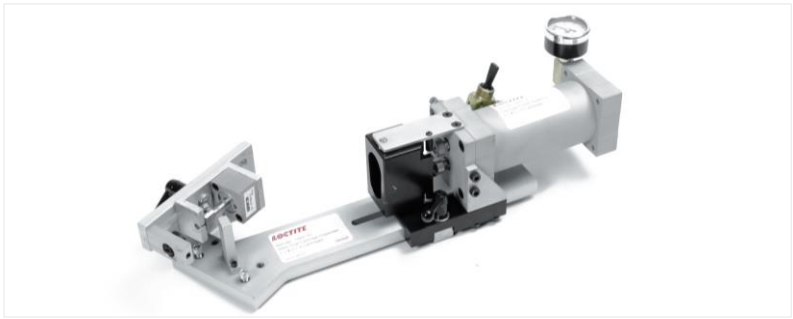

Description	Article Number	IDH Number
50 ml Dual Cartridge Dispenser	EQ MM10 1:1 / 2:1 A-Style Cartridges	1633364
	EQ MM10 1:1 / 2:1 B Style Cartridges	1633365
	EQ MM10 4:1 / 10:1 B Style Cartridges	1633366

Technical Data	
Dimensions	297 mm (W) x 376 mm (D) x 118 mm (H)
Weight	2.5 kg
Items supplied	EQ MM10 50ml Dual cartridge Dispenser, Robot mounting screws, Operating Manual

NOTE: Anti Drip Valves must be ordered separately IDH # 1445944 (100 pk)

Click here to watch the demo video!

IDH 88653

LOCTITE Footswitch

Application Field

The LOCTITE Footswitch is designed for to initiate LOCTITE Dispense and Curing equipment.

Operation

The LOCTITE Footswitch is used in combination with LOCTITE Dispense and Curing equipment. It connects to the equipment via a standard Male 9 pin D connector.

It provides a start signal to each dispense/cure equipment and enables the operator to keep hands free for other assembly tasks.

Technical Data	
Weight	0.6 kg
Electrical connector	Standard male 9 pin D connector
Items supplied	97201 Footswitch

LOCTITE®

Dispense Needles, Mixers and Accessories

Illustration / Example	Item No.	Order No.	Pack Size	Colour	Gauge	Inner Ø, mm
Flexible Dispensing Tips: Dispensing Needle, Polypropylene (PPF), Helical Thread						
	97229	142640	50 pcs	Amber	15	1.37
	97230	142641	50 pcs	Green	18	0.84
	97231	142642	50 pcs	Pink	20	0.61
	97232	142643	50 pcs	Red	25	0.25
Tapered Dispensing Tips: Dispensing Needle, Polyethylene – Conical (PPC), Luer-Lock						
	97221	88660	50 pcs	Grey	16	1.19
	97222	88661	50 pcs	Green	18	0.84
	97223	88662	50 pcs	Pink	20	0.61
	97224	88663	50 pcs	Blue	22	0.41
High Precision Dispensing Tips: Dispensing Needle, Stainless Steel Standard (SSS), Luer-Lock						
	97225	88664	50 pcs	Amber	15	1.37
	97226	88665	50 pcs	Green	18	0.84
	97227	88666	50 pcs	Pink	20	0.61
	97228	88667	50 pcs	Red	25	0.25

Additional Dispensing Tips and Mixer Nozzles

Illustration	Item No.	Order No.	Pack Size	Description
	98741	1146079	50 pcs	Dispensing needle, stainless steel – PTFE-lined (SSTL), 25 gauge
	97262	218288	2 each	Needle selection pack: 2 each of a variety of dispensing needles
	K1003100	88805	50 pcs	Formable dispensing tip, 21 gauge / 0.5 mm
	97248	218275	50 pcs	Luer-Lock® tip caps
	97233	88672	20 + 5 pcs	Luer-Lock® adapter kit: 20 Luer-Locks® and 5 adapters
	97207	88656	40 pcs	10 ml clear syringe barrel kit

Additional Dispensing Tips and Mixer Nozzles

Illustration	Item No.	Order No.	Pack Size	Description
	97283	529462	40 pcs	10 ml amber syringe barrel kit, for UV products
	97263	218287	40 pcs	10 ml black syringe barrel kit, for UV and light cure adhesives
	97208	88657	2 pcs	10 ml syringe airline adapter
	97244	88677	20 pcs	30 ml clear syringe barrel kit
	97264	218286	20 pcs	30 ml black syringe barrel kit, for UV and light cure adhesives
	97245	88678	2 pcs	30 ml syringe airline adapter
	97290	397462	50 pcs	All plastic precision dispensing tip, 20 gauge
	984569	1487440	10 pcs	Static mixer for epoxy and PU in 50 ml, SQ 5.3-24
	n.a.	2900614	10 pcs	Static mixer for epoxy and PU in 50 ml, SQ 24
	984570	1487439	10 pcs	Static mixer for epoxy in 200 / 400 ml, SQ 7.5-24
	1034575	1034575	10 pcs	Static mixer MBX 6.5-20-S 10:1 for LOCTITE AA 3038
	n.a.	2447734	10 pcs	Spray mix nozzle for LOCTITE PC 7255 MFQ-08-24C-13
	8953186	1104046	10 pcs	Static mixer 4:1 / 10:1 for 400 / 490 ml, MCX 08-18
	5289010	545996	10 pcs	Static mixer 1:1 for acrylics in 50 ml, MA 6.3-7
	98457	720174	10 pcs	Static mixer 1:1 / 2:1 in 200 / 400 ml, MC 8-24
	863585	367545	10 pcs	Static mixer 1:1 for MS polymers in 410 ml, MC 13-18
	8953187	1104047	10 pcs	Static mixer 4:1 / 10:1 in 400 / 490 ml, MCX 08-24
	8955989	1453183	10 pcs	Static mixer for LOCTITE 3090 and LOCTITE 4070, MLX 2.5-16-5
	n.a.	1826921	10 pcs	Static mixer 1:1 / 2:1 in 50 ml, MBH 3.2-16 S
	n.a.	1573153	10 pcs	Static mixer 1:1 / 2:1 in 50 ml, MBQ 5.0-24 L
	n.a.	1573135	10 pcs	Static mixer 1:1 / 2:1 in 400 ml, MFH 6.0-24 T

Volumetric Dispensing Systems – 2K

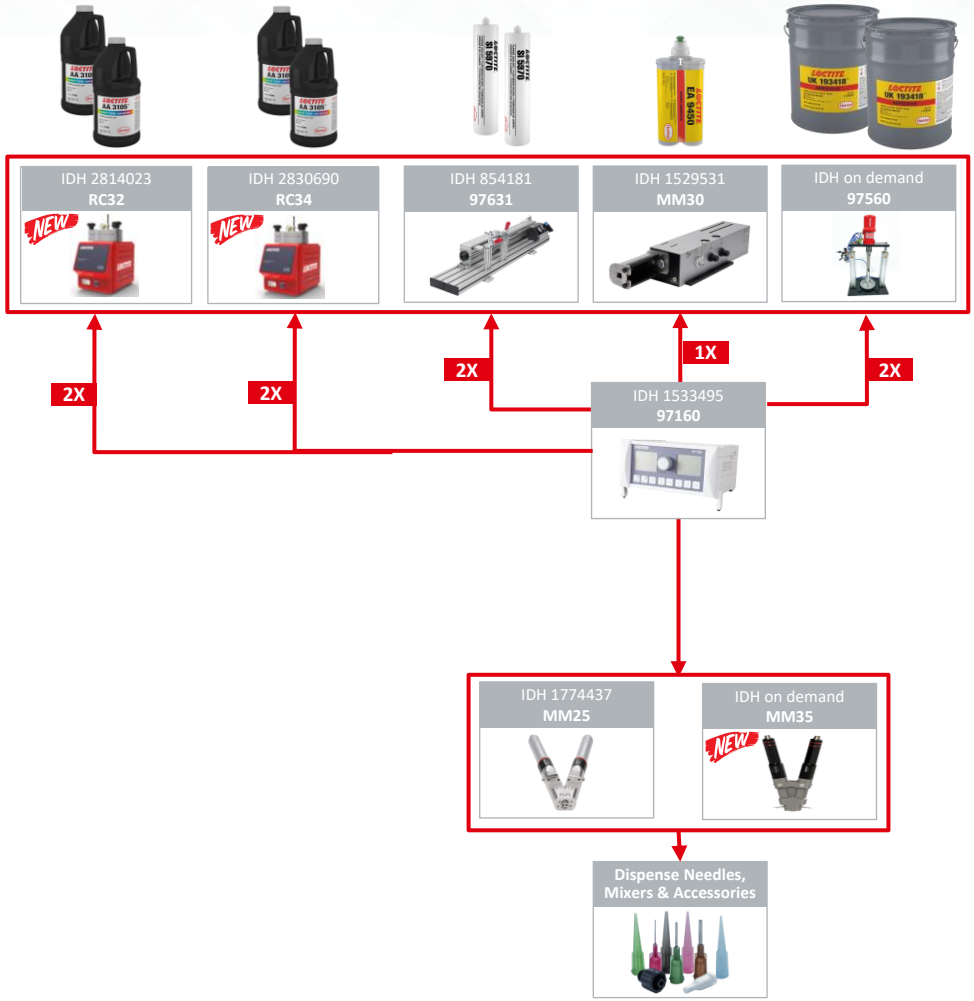

IDH 2814023

LOCTITE RC32 Automatic Reservoir SP

Application Field

The LOCTITE EQ RC32 Automatic Reservoir is equipped with a single point low level sensor that sends an electronic signal to a LOCTITE brand controller and is typically integrated into a dispensing system that consist of a dispensing valve and one of these controllers. The reservoir can be applied directly from the original 250 ml, 500 gr, 1 liter, 2 kg and 200 gr adhesive packages.

Product Features

- Modular design allows user to build suited application process
- Operational with manual, semi-automatic and automatic controllers
- Low level sensor alarm provides warning for adhesive bottle replacement
- Integrated solenoid vent valve

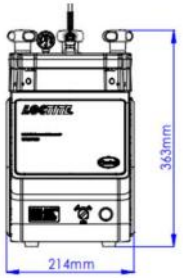

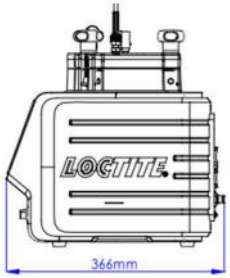

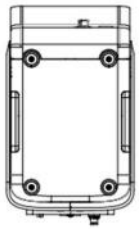

Technical Data	
Dimensions 0,5l	214 mm x 366 mm x 363 mm (W x D x H)
Weight	4.0 kg
Internal Control Voltages	24 VDC
Pneumatic Supply	Clean, dry air not exceed 8 bar (116 psi) and filtered with a maximum of 10 micron
Pneumatic Hose Size	External dia. 6 mm
Items supplied	Operation Manual, Reservoir Tank Fitting 1/4" NPT and tubing), Tank Cord, Bottle Holder, 1/4" NPT to 6 mm inlet supply line connector, Anti-bubbler Fitting and Tube Kit, Tube of silicone grease, Bottle spacer disc

LOCTITE®

IDH 2830690

LOCTITE RC34 Automatic Reservoir DP

Application Field

The LOCTITE EQ RC34 Automatic Reservoir DP is equipped with an analogue low level sensor that sends an electronic signal to a Loctite brand controller and is typically integrated into a dispensing system that consist of a dispensing valve and one of these controllers. The reservoir can be applied directly from the original 250 ml, 500 gr, 1 liter, 2 kg and 200 gr adhesive packages.

Product Features

- Modular design allows user to build suited application process
- Operational with manual, semi-automatic and automatic controllers
- Low level sensor alarm provides warning of low level and empty for adhesive bottle replacement
- Integrated solenoid vent valve

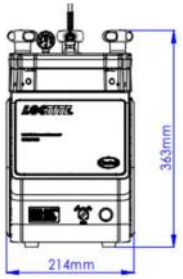

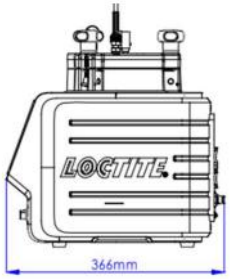

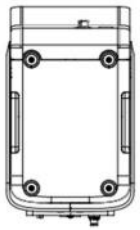

Technical Data	
Dimensions 0,5l	214 mm x 366 mm x 363 mm (W x D x H)
Weight	4.0 kg
Internal Control Voltages	24 VDC
Pneumatic Supply	Clean, dry air not exceed 8 bar (116 psi) and filtered with a maximum of 10 micron
Pneumatic Hose Size	External dia. 6 mm
Items supplied	Operation Manual, Reservoir Tank Fitting 1/4" NPT and tubing), Tank Cord, Bottle Holder, 1/4" NPT to 6 mm inlet supply line connector, Anti-bubbler Fitting and Tube Kit, Tube of silicone grease, Bottle spacer disc

LOCTITE®

IDH 854181

LOCTITE 97631 300 ml Cartridge Dispenser

Application Field

The LOCTITE 97631 Cartridge Dispenser 97631 is used to dispense bubble minimized LOCTITE products in 300 ml cartridges such as Gel-CA, Anaerobics, Epoxies and Silicones. In connection with a dispensing valve or eccentric rotor pump it can be used in transfer lines, manual or automatic workplaces.

Operation

The LOCTITE 97631 300 ml Cartridge Dispenser should be pressurized from a LOCTITE controller with max. 4 bar (58 PSI). The piston of the pneumatic cylinder presses the product out of the cartridge and forces it through the feedline to the dispensing valve/eccentric rotor pump. When connected to a Controller 97152, the regulated air pressure is available at the unit when the controller is switched on. The piston can be switched to the forward position, "keep in position" or piston backwards. It will be depressurized automatically when the controller is switched off. No movement of the piston is possible.

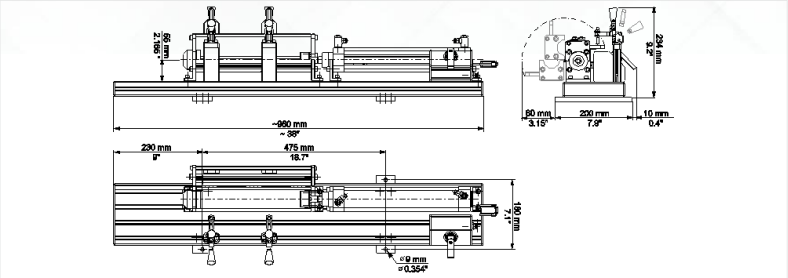

Technical Data	
Dimensions	960mm (L) x 210 mm (W) x 234 mm (H)
Weight	11.6 kg
Pneumatic supply	Regulated air pressure (I) from the controller
Pressure input limit	max. 4 bar (58 PSI)
(maximum feed pressure)	
Pneumatic Hose	OD 6 mm , ID 4 mm
Product Feedline	Standard OD ⅜"
Product Fitting Thread	Standard G ⅜"
Items supplied	300ml Cartridge dispenser, Pushers (for Al, Semco, Ritter & Fischbach cartridges), Adaptors (for Al, Semco, Ritter & Fischbach cartridges), OD 6mm airline x 2m, Sleeve for Al cartridge, Operating Manual

IDH 1529531

LOCTITE EQ MM30 Dual Cartridge Pusher

Application Field

The LOCTITE EQ MM30 is designed for 2K methyl methacrylate (MMAs), epoxy, silicone and hybrid products in 400ml cartridges.

Operation

LOCTITE EQ MM30 Dual Cartridge Pusher is used as a supply unit for volumetric 2K dispensers such as the MM25 Dual Compact Rotor Pump. Two piston rods are mechanically driven independently to ensure continuous supply of both products. To increase the process reliability, a path measurement is integrated allowing the measurement of both piston rods.

Benefits

- Mixing ratio and dispensed volume can be monitored via path measurement and mechanical pointers
- Low level sensing
- Independent pressure control to each side of the 400ml 2K cartridge

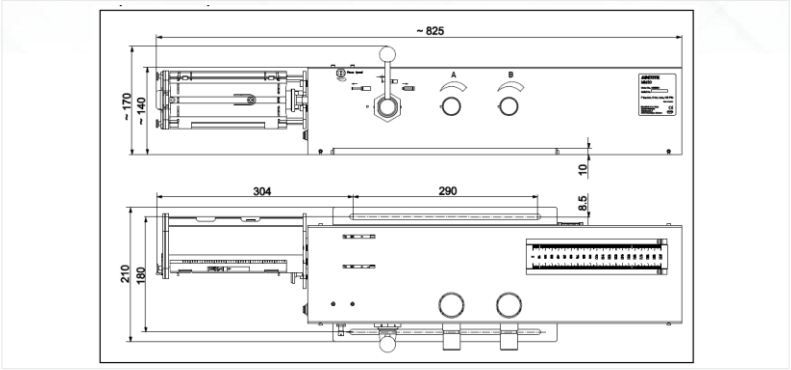

Technical Data	
Dimensions	810 mm (L) x 210 mm (W) x 170 mm (H)
Weight	13.5 kg
Pressure input limit	max. 6 bar (87 PSI)
Pneumatic Hose	OD 6 mm , ID 4 mm
Items supplied	EQ MM30 Dual cartridge Pusher, Cartridge tray 1:1/2:1, Cartridge tray 4:1, 2m Pneumatic hose, Operating Manual

LOCTITE®

IDH on demand

LOCTITE 97560 Extrusion Pump 26:1

Application Field

The Extrusion Pump 26:1 is a high-pressure pneumatic pump used for extrusion and transfer of high viscous and paste products. The pump is essentially constituted of an air motor and the pumping group, mounted on a ram. In the air motor, compressed air causes the vertical reciprocating movement of the motor piston; this movement is transmitted through a connecting rod to the material pumping piston ending with a shovel plate allowing to suck very viscous products. The shovel plate (follower plate) is supplied with a series of gaskets able to protect the product contained in the pail from powder, moisture and drying process caused by the touch with air. The use of the ram enables to drive the sucking unit of the pump during the product intake phase directly into the 20 ℓ pails. The ram can automatically compensate the shovel plate descent during the use of the product. This system allows lifting of the extrusion pump for a quick replacement of the pail when it is empty. The ratio 26:1 means that the outlet pressure of product is 26 times higher than the pump feed air pressure. In order to ensure best product compatibility, the pumping group and sealing balls are made from stainless steel.

Please consult TCS Experts for further information (Level 3 Support)!

Technical Data	
Dimensions	800 mm (L) x 600 mm (W) x 1800 mm (H)
Weight	67 kg
Pneumatic supply	Max. 7 bar (100 psi)
Pressure input min	max. 3.5 bar (50 psi)
Material Outlet	G 3/4“ female
Maximal Output Pressure	182 bar (2730 psi) for 26:1
Max product flow rate	4 liter/min (26:1)

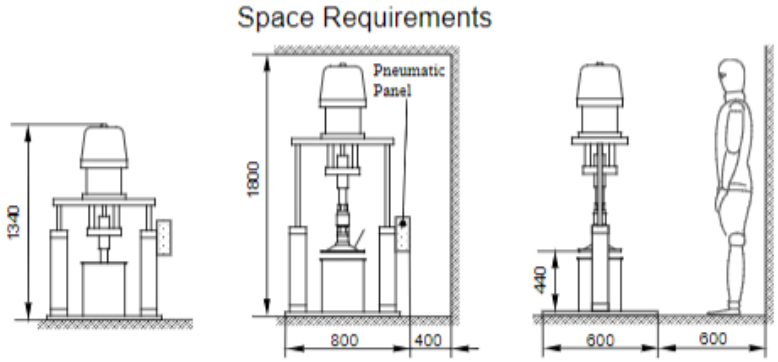

LOCTITE®

IDH 1533495

LOCTITE 97160 Dual Rotor Pump Controller

Application Field

The LOCTITE 97160 Dual Rotor Pump Controller is designed for 2K methyl methacrylate (MMAs), epoxy, silicone and hybrid products in 400ml cartridge. Applications include drop or bead dispensing or potting.

Operation

The LOCTITE 97160 Dual Rotor Pump Controller offers a wide range of options for adjusting the desired quantity of product to be dispensed. A mixing ratio from 1:1 to 5:1 can be adjusted. All dosing related values can be stored on an SD card, and can be retrieved and modified at any time. The controller has a graphical user interface for operator guidance and operation. It provides all the functions required to control the MM25 Dual Rotor Pump providing precise control of the rotation speed. It can be set to provide volumetric flow rate or volume dispense to suit the application requirement. It can be interfaced with a higher-ranking PLC for integration into automatic systems.

Benefits

- Easy menu navigation to allow users to select either the amount of product dispensed (in ml) or the dispense rate (in ml / min)
- Very high repetition accuracy
- Automatic purge feature to prevent mixer nozzle curing

Technical Data	
Dimensions	240 mm (W) x ~115 mm (H) x 260 mm (D)
Weight	1.3 kg
Power Supply	External: 100-240 VAC ~ 1,2 A max, 47 - 63 HZ. 100 -2 00 VA; Controller: 24 VDC
Pressure Control	Dispensing: 0 - 40 bar; Operating: 0 - 7 bar
External Memory	MM C/SD-Card, min. 64 MB, max. 24 Suspense Programs
Start/Stop External Signal	24 V impulse, 100 mA terminal strip, low 0 to 1.5 V, high 12 to 24 V
Items supplied	97160 Dual Rotor Pump Controller, SD Card (512MB), Connectors, Operating Manual

Click here to watch the demo video!

IDH 1774437

LOCTITE EQ MM25 Dual Rotor Pump

Application Field

The LOCTITE EQ MM25 is designed for 2K methyl methacrylate (MMAs), epoxy, silicone and hybrid products.

Operation

The LOCTITE EQ MM25 2K dispenser uses a rotating displacement consisting of a rotor and a stator. Several voids are produced as a result of the various geometries of the conveying elements. Conveying that is either proportional to the angle of rotation or else is rpm-dependent is produced by the rotation of the rotor in the stator. Since the direction of flow is reversible, the adhesive can be sucked back to allow a clean break of the product.

Benefits

Positive displacement

- Repeatability > 99 %
- Accurate and adjustable flowrate control
- Self-sealing with controlled stalling of the product bead
- Volumetric device, flow rate proportional to speed, electronically controlled.
- Dispenses 2K MMAs, Epoxies, PU or Silicones
- Applications include drop or bead dispensing or potting
- Integrated Adapter for B type mixer ensures sealing in flow

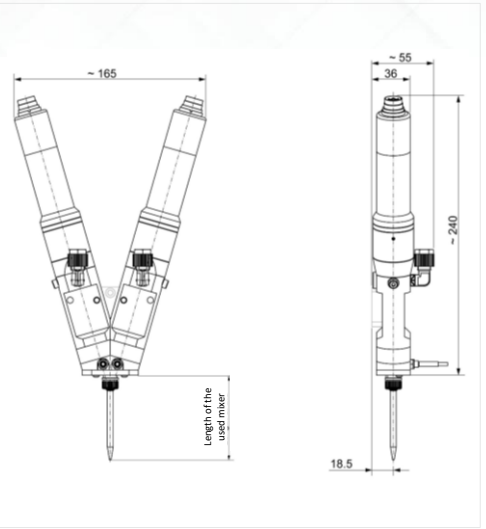

Technical Data	
Minimum Dispensing Quantity	0.01 ml
Accuracy	+/- 1%
Volume Flow	0.005 to 6 ml/m (per pump)
Input Pressure, non-self-levelling Liquid	0 - 20 bar
Max. Dispensing Pressure	0 - 40 bar
Intrinsic Tightness	Ca. 2 bar
AS DUAL ROTOR PUMP	
Weight	~ 1.1 kg
Mixing Ratio	1:1 to 10:1
Volume Flow	0.2 - 12 ml/min
Items supplied	EQ MM25 Dual Rotor Pump, Mounting Tool, 2 x Screw drivers, Operating Manual

Click here to watch the demo video!

IDH on demand

LOCTITE EQ MM35 High Flow Dual Rotor Pump

Application Field

The LOCTITE EQ MM35 High Flow Dual Rotor Pump applies 2K LOCTITE adhesives, like MMAs, Epoxies, PU or Silicones with high repeatability. The limit of viscosity is approx. 400,000 mPas. Applications include drop or bead dispensing or potting.

Operation

The LOCTITE EQ MM35 2K dispenser uses a rotating displacement consisting of a rotor and a stator. Several voids are produced as a result of the various geometries of the conveying elements. Conveying that is either proportional to the angle of rotation or else is rpm-dependent is produced by the rotation of the rotor in the stator. Since the direction of flow is reversible, the adhesive can be sucked back to allow a clean break of the product.

Benefits

Positive displacement

- Repeatability > 99 %
- Accurate and adjustable flowrate control
- Self-sealing with controlled stalling of the product bead
- Volumetric device, flow rate proportional to speed, electronically controlled.
- Dispenses 2K MMAs, Epoxies, PU or Silicones
- Applications include drop or bead dispensing or potting
- Integrated Adapter for B type mixer ensures sealing in flow

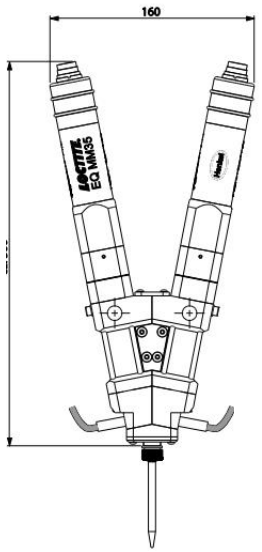

Technical Data	
Minimum Dispensing Quantity	0.03 ml
Accuracy	+/- 1%
Volume Flow	0.3 to 16 ml/m (per pump)
Input Pressure, non-self-levelling Liquid	0 - 20 bar
Max. Dispensing Pressure	0 - 40 bar
Intrinsic Tightness	Ca. 2 bar
AS DUAL ROTOR PUMP	
Weight	~ 3.2 kg
Mixing Ratio	1:1 to 10:1
Volume Flow	0.6 - 32 ml/min
Items supplied	EQ MM35 Dual Rotor Pump, Mounting Tool, 2 x Screw drivers, Operating Manual

Click here to watch the demo video!

Dispense Needles, Mixers and Accessories

Illustration / Example	Item No.	Order No.	Pack Size	Colour	Gauge	Inner Ø, mm
Flexible Dispensing Tips: Dispensing Needle, Polypropylene (PPF), Helical Thread						
	97229	142640	50 pcs	Amber	15	1.37
	97230	142641	50 pcs	Green	18	0.84
	97231	142642	50 pcs	Pink	20	0.61
	97232	142643	50 pcs	Red	25	0.25
Tapered Dispensing Tips: Dispensing Needle, Polyethylene – Conical (PPC), Luer-Lock						
	97221	88660	50 pcs	Grey	16	1.19
	97222	88661	50 pcs	Green	18	0.84
	97223	88662	50 pcs	Pink	20	0.61
	97224	88663	50 pcs	Blue	22	0.41
High Precision Dispensing Tips: Dispensing Needle, Stainless Steel Standard (SSS), Luer-Lock						
	97225	88664	50 pcs	Amber	15	1.37
	97226	88665	50 pcs	Green	18	0.84
	97227	88666	50 pcs	Pink	20	0.61
	97228	88667	50 pcs	Red	25	0.25

Additional Dispensing Tips and Mixer Nozzles

Illustration	Item No.	Order No.	Pack Size	Description
	98741	1146079	50 pcs	Dispensing needle, stainless steel – PTFE-lined (SSTL), 25 gauge
	97262	218288	2 each	Needle selection pack: 2 each of a variety of dispensing needles
	K1003100	88805	50 pcs	Formable dispensing tip, 21 gauge / 0.5 mm
	97248	218275	50 pcs	Luer-Lock® tip caps
	97233	88672	20 + 5 pcs	Luer-Lock® adapter kit: 20 Luer-Locks® and 5 adapters
	97207	88656	40 pcs	10 ml clear syringe barrel kit

Additional Dispensing Tips and Mixer Nozzles

Illustration	Item No.	Order No.	Pack Size	Description
	97283	529462	40 pcs	10 ml amber syringe barrel kit, for UV products
	97263	218287	40 pcs	10 ml black syringe barrel kit, for UV and light cure adhesives
	97208	88657	2 pcs	10 ml syringe airline adapter
	97244	88677	20 pcs	30 ml clear syringe barrel kit
	97264	218286	20 pcs	30 ml black syringe barrel kit, for UV and light cure adhesives
	97245	88678	2 pcs	30 ml syringe airline adapter
	97290	397462	50 pcs	All plastic precision dispensing tip, 20 gauge
	984569	1487440	10 pcs	Static mixer for epoxy and PU in 50 ml, SQ 5.3-24
	n.a.	2900614	10 pcs	Static mixer for epoxy and PU in 50 ml, SQ 24
	984570	1487439	10 pcs	Static mixer for epoxy in 200 / 400 ml, SQ 7.5-24
	1034575	1034575	10 pcs	Static mixer MBX 6.5-20-S 10:1 for LOCTITE AA 3038
	n.a.	2447734	10 pcs	Spray mix nozzle for LOCTITE PC 7255 MFQ-08-24C-13
	8953186	1104046	10 pcs	Static mixer 4:1 / 10:1 for 400 / 490 ml, MCX 08-18
	5289010	545996	10 pcs	Static mixer 1:1 for acrylics in 50 ml, MA 6.3-7
	98457	720174	10 pcs	Static mixer 1:1 / 2:1 in 200 / 400 ml, MC 8-24
	863585	367545	10 pcs	Static mixer 1:1 for MS polymers in 410 ml, MC 13-18
	8953187	1104047	10 pcs	Static mixer 4:1 / 10:1 in 400 / 490 ml, MCX 08-24
	8955989	1453183	10 pcs	Static mixer for LOCTITE 3090 and LOCTITE 4070, MLX 2.5-16-5
	n.a.	1826921	10 pcs	Static mixer 1:1 / 2:1 in 50 ml, MBH 3.2-16 S
	n.a.	1573153	10 pcs	Static mixer 1:1 / 2:1 in 50 ml, MBQ 5.0-24 L
	n.a.	1573135	10 pcs	Static mixer 1:1 / 2:1 in 400 ml, MFH 6.0-24 T

Hand Applicators

1K Adhesives

Bottle Dispensers

IDH 608966
98414

IDH 88631
97001

IDH 2564842
EQ **Pro Pump**

NEW

Syringe/Cartridge Dispensers

IDH 88632
97002

IDH 363544
96005

2K Adhesives

50ml Cartridge Dispensers

IDH 267452
96001

IDH 476898
97042

200ml Cartridge Dispensers

IDH 2693822
EQ **HD14 Manual**

NEW

IDH 2693824
EQ **HD14 Pneumatic**

NEW

400ml Cartridge Dispensers

IDH 2693823
EQ **HD14 Manual**

NEW

IDH 2693825
EQ **HD14 Pneumatic**

NEW

Spray Dispensers

IDH 2251591
EQ **HD12**

Dispense Needles, Mixers & Accessories

IDH 608966

LOCTITE 98414 Peristaltic Handpump

Application Field

LOCTITE 98414 Peristaltic Handpump is a manual peristaltic, volumetric bottle-top handpump applicator. It is designed for use with Anaerobic adhesives in 50 ml bottles for viscosities up to approx. 30,000 mPa·s.

Operation

The LOCTITE 50 ml bottle Handpump is a portable, precision, bottle-top applicator that attaches firmly onto any 50ml. anaerobic bottle. It includes an ergonomically balanced and resilient bottle stand that greatly reduces the tendency of bottle tipping. The unit will dispense single shots of LOCTITE anaerobic threadlockers and retaining compounds from 0.01 to 0.4 ml with viscosities up to 30,000 mPas. These units require no flushing, power or air source. It is designed to dispense at any angle without leaks or product waste.

Benefits

- Ideal for accurate drop dispensing. Improves quality and reduces waste
- Mounts easily to standard 50ml anaerobic bottles
- Ensures no leakage, regardless of the orientation of the bottle
- Requires no flushing, power or air source

Technical Data	
Dimensions	Pump: 102 mm (H) x 146 mm (W) x 38 mm (D)
	Bottle stand: 115 mm (H) x 100 mm (W) x 58 mm (D)
Items supplied	98414 Peristaltic Handpump (50ml)

Click here to watch the demo video!

IDH 88631

LOCTITE 97001 Peristaltic Handpump

Application Field

LOCTITE 97001 Peristaltic Handpump is a manual, peristaltic, volumetric bottle-top handpump applicator. It is designed for use with Anaerobic adhesives in 250ml bottles for viscosities up to approx. 30,000 mPas.

Operation

The LOCTITE 250ml Bottle Handpump 97001 is a portable, precision, bottle-top applicator that attaches firmly onto any 250 ml anaerobic bottle. It converts the product bottle into a manual mobile dispenser. These units will dispense single shots of LOCTITE anaerobic Threadlockers and Retaining Compounds from 0.01 to 0.4 ml with viscosities up to 30,000 mPas. They require no flushing, power or air source. They are designed to dispense at any angle without leaks and eliminate waste of product.

Benefits

- Ideal for accurate drop dispensing therefore improves quality and reduces waste
- Mounts easily to standard 250 ml anaerobic bottles
- Ensures no leakage, regardless of the orientation of the bottle
- Requires no flushing, power or air source

Technical Data	
Dimensions	Pump: 102 mm (H) x 146 mm (W) x 38 mm (D)
Items supplied	97001 Peristaltic Handpump 250ml

Click here to watch the demo video!

IDH 2564842

LOCTITE EQ Pro Pump

Application Field

The LOCTITE Pro Pump Hand-held Dispenser is a bottle-mounted adhesive dispenser that can be used with 50 ml or 250 ml bottles of LOCTITE anaerobic adhesives creating a complete dispensing system. This dispenser utilizes patented progressive cavity pump technology that is specifically designed to dispense LOCTITE anaerobic threadlockers and retaining compounds.

Operation

The ergonomic design allows the user to deliver a drop of adhesive with a single pull of the trigger. The multi-position nozzle delivers adhesive in three different orientations, horizontal, 45° up and 45° down and can also be folded down 90° for storage. The LOCTITE Pro Pump Hand-held Dispenser enables more accurate and consistent application while eliminating waste and mess

Benefits

- No assembly required – Fluid Compatibility Anaerobic Adhesives
- Compatible with all LOCTITE Anaerobic Threadlockers and Retaining Compounds
- Fits on both 50 ml and 250 ml LOCTITE adhesive bottles (no additional parts needed)
- Average dispense volume = 30 mg (30µl)
- Articulating nozzle with slip luer feature for dispense tips
- Easy to setup and easy to use
- Viscosity Range: 1 to 15,000 mPas
- Provides precise drop placement

Technical Data	
Dimensions	Pump: 114.3 mm x 40 mm x 115.5 mm
Items supplied	EQ Pro Pump

Click here to watch the demo video!

IDH 88632

LOCTITE 97002 Pneumatic Handgun

Application Field

LOCTITE 97002 Pneumatic Handgun for plastic and aluminum cartridges. It is designed for LOCTITE 250 ml tubes and 300 ml cartridges.

Operation

LOCTITE Hand-held 300 ml Cartridge Dispenser is a manually controlled, pneumatically operated unit. The amount and rate is controlled by the operator.

Benefits

- Rapid-loading system to make cartridge changes clean and easy
- Ergonomically designed
- Simple and clean dispensing

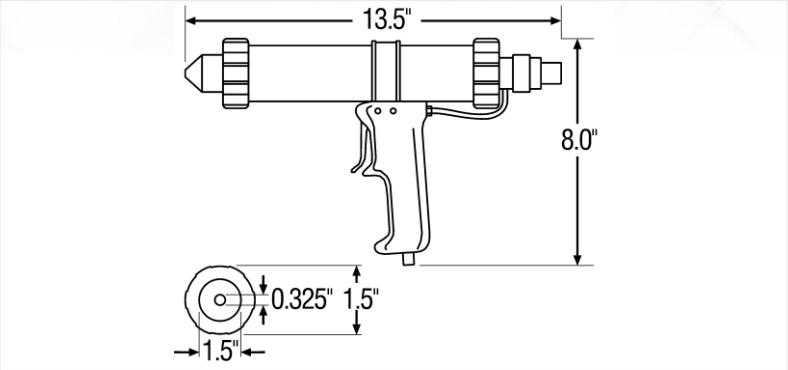

Technical Data	
Weight	0.800 kg
Pneumatic Quality	Filtered 10 µm, oil-free, non-condensing
Cartridge pressure	max. 8.5 bar (125 psi)
Squeeze tube pressure	max. 1.5 bar (22 psi)
Pneumatic hose size	OD 6 mm , ID 4 mm
Dimensions (WxDxH)	320 x 230 x 70 mm
Items supplied	97002 Pneumatic Handgun, Tube adaptor, Pneumatic hose

IDH 363544

LOCTITE 96005 Manual Dispensing Applicator 50 ml

Application Field

The LOCTITE 96005 Manual Dispensing Applicator is designed for any product package in a standard 50 ml cartridge.

Operation

The LOCTITE Manual Dispensing Applicator for 50 ml Cartridges is a hand-held, manually operated dispenser for use with any product packaged in a standard 50 ml cartridge. This dispenser provides a convenient, cost-effective method to apply product.

Benefits

- Pistol configuration for ease of application
- Ergonomic design minimizes operator fatigue

Technical Data	
Items supplied	96005 Manual dispensing applicator 50ml

LOCTITE®

IDH 267452

LOCTITE 96001 Dual Cartridge Handpump

Application Field

The LOCTITE 96001 50 ml Dual Cartridge Applicator is a hand-held, manually operated dispenser. The dispenser provides a convenient, cost-effective method to apply product from 2K cartridges. It is used for 1:1 and 2:1 mix ratio products.

Operation

The LOCTITE 96001 dual Cartridge Handgun is designed for 2K epoxy, polyurethane and hybrid products in 50ml cartridges.

Benefits

- Convenient, cost-effective method of application
- Good ergonomic features to minimize operator fatigue

Technical Data	
Weight	0,18 kg
Items supplied	96001 50ml Dual Cartridge Handpump 1:1/2:1 Plunger 10:1 (extended) Plunger to suit Loctite 4070 x 50ml

IDH 476898

LOCTITE 97042 Pneumatic Dual Cartridge Handpump

Application Field

The LOCTITE 97042 Pneumatic Dual Cartridge Handpump is designed for 2K epoxy, polyurethane and hybrid products in 50ml dual cartridges.

Operation

The LOCTITE 50 ml Dual Cartridge Applicator is a hand-held, pneumatically driven meter-mix dispenser. It provides a convenient, cost-effective method for applying product with minimal waste. The adjustable dispense rate is set via the integral air pressure regulator (range 1-5 recommended). The applicator is capable for 1:1 and 1:2 mix ratio products and can easily be modified for 35 ml 10:1 mix ratio products. Mix nozzles are sold separately.

Benefits

- Lightweight and ergonomic design for easy use
- Integrated air pressure regulator
- Convenient 8-position thumb wheel pressure adjustment to control the dispense rate

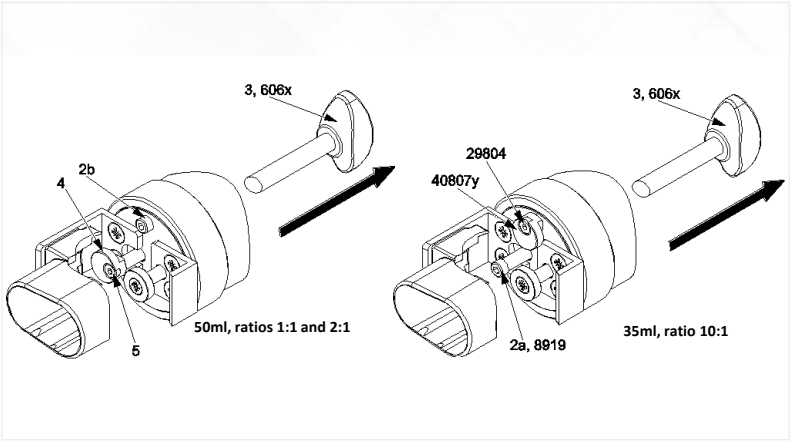

Technical Data	
Dimensions	292 mm (L) x 191 mm (H) x 58 mm (D)
Weight	0.725 kg
Pneumatic Supply	Minimum: 4.8 bar (30 psi) Maximum: 8 bar (125 psi)
Items supplied	97042 Pneumatic Dual cartridge handpump 50ml

IDH 2693822

LOCTITE EQ HD14 200 ml Manual Dispenser

Application Field

The LOCTITE HD14 200 ml Dual Cartridge Manual Applicator has been developed for mixing and applying 2K adhesives of various adhesive chemistries.

Operation

The LOCTITE HD14 200 ml Dual Cartridge Manual Applicator is a hand-held, manually operated meter-mix dispenser. These dispensers provide a convenient, cost-effective method to apply product with minimal waste. The dispensers are compatible with 1:1, 1:2, 4:1 & 10:1 mix ratio products.

Technical Data	
Weight	1.60 kg
Compressed Air Supply	NA
Cartridge Ratios	1:1, 2:1, 4:1 & 10:1
Operating Pressure	NA
Air Supply	Variable 0 – 6 bar (87 psi)
Air Inlet	NA
Items supplied	EQ HD14 200 ml Manual Dispenser

IDH 2693823

LOCTITE EQ HD14 400 ml Manual Dispenser

Application Field

The LOCTITE HD14 400 ml Dual Cartridge Manual Applicator has been developed for mixing and applying 2K adhesives of various adhesive chemistries.

Operation

The LOCTITE HD14 400 ml Dual Cartridge Manual Applicator is a hand-held, manually operated meter-mix dispenser. These dispensers provide a convenient, cost-effective method to apply product with minimal waste. The dispensers are compatible with 1:1, 1:2, 4:1 & 10:1 mix ratio products.

Technical Data	
Weight	1.93 kg
Compressed Air Supply	NA
Cartridge Ratios	1:1, 2:1, 4:1 & 10:1
Operating Pressure	NA
Air Supply	Variable 0 – 6 bar (87 psi)
Air Inlet	NA
Items supplied	EQ HD14 400 ml Manual Dispenser

IDH 2693824

LOCTITE EQ HD14 200 ml Pneumatic Dispenser

Application Field

The LOCTITE HD14 200 ml Dual Cartridge Pneumatic Applicator has been developed for mixing and applying 2K adhesives of various adhesive chemistries.

Operation

The LOCTITE HD14 200 ml Dual Cartridge Pneumatic Applicator is a hand-held, manually operated meter-mix dispenser. These dispensers provide a convenient, cost-effective method to apply product with minimal waste. The dispensers are compatible with 1:1, 1:2, 4:1 & 10:1 mix ratio products.

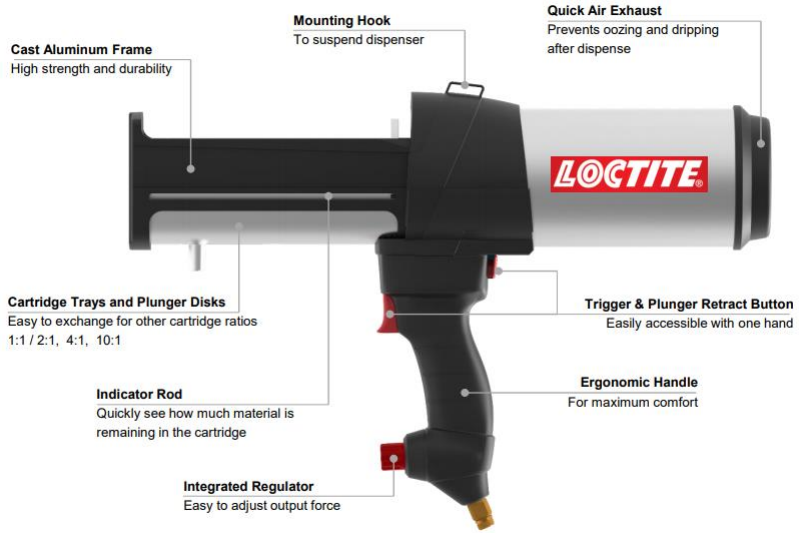

Technical Data	
Weight	1.76 kg
Compressed Air Supply	10 bar max
Cartridge Ratios	1:1, 2:1, 4:1 & 10:1
Operating Pressure	6.8 bar
Air Supply	Variable 0 – 10 bar
Air Inlet	¼" Male NPT
Items supplied	EQ HD14 200 ml Pneumatic Dispenser

IDH 2693825

LOCTITE EQ HD14 400 ml Pneumatic Dispenser

Application Field

The LOCTITE HD14 400 ml Dual Cartridge Pneumatic Applicator has been developed for mixing and applying 2K adhesives of various adhesive chemistries.

Operation

The LOCTITE HD14 400 ml Dual Cartridge Pneumatic Applicator is a hand-held, manually operated meter-mix dispenser. These dispensers provide a convenient, cost-effective method to apply product with minimal waste. The dispensers are compatible with 1:1, 1:2, 4:1 & 10:1 mix ratio products.

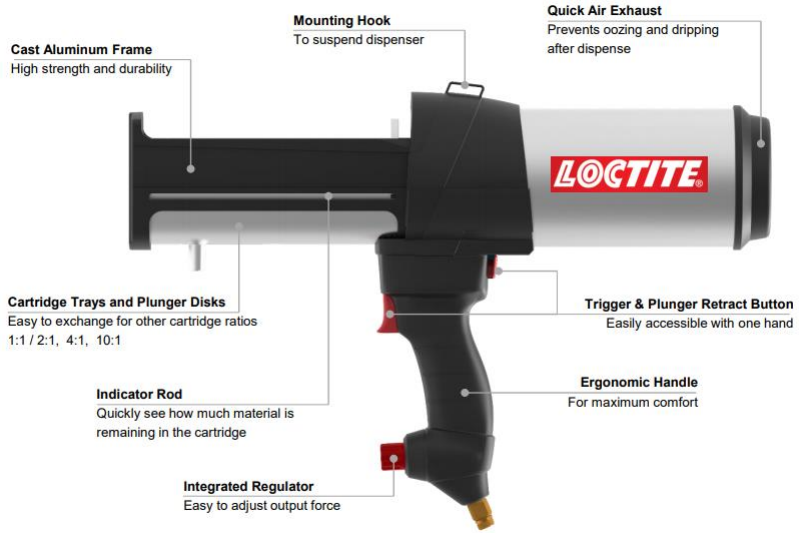

Technical Data	
Weight	2.66 kg
Compressed Air Supply	10 bar max
Cartridge Ratios	1:1, 2:1, 4:1 & 10:1
Operating Pressure	6.8 bar
Air Supply	Variable 0 – 10 bar
Air Inlet	¼" Male NPT
Items supplied	EQ HD14 400 ml Pneumatic Dispenser

IDH 2251591

LOCTITE EQ HD12 Pneumatic Spray Dispenser

Application Field

The LOCTITE HD12 Pneumatic Spray Dispenser is suitable for spraying LOCTITE PC 7255 packaged in 1125 ml Dual Cartridge (2:1 ratio). This dispenser is designed for 2:1 mix ratio products.

Operation

The LOCTITE HD12 Pneumatic Spray Dispenser includes Heavy duty dual cartridge handgun for 750+375 ml side-by-side dual cartridge with Spray adapter, pressure regulator, gauge, on/off-valve and air hose.

Benefits

- Control pressure separately adjustable for advancing cylinder and atomizing air
- A hand lever valve is provided for turning the atomizing air supply to the spray nozzle on and off

Technical Data	
Weight	3.6 kg
Pneumatic Supply	Min. 6 bar, max. 8 bar
Supply Air Cartridge Pusher	Min. 6 bar, typically full throttle
Spray Air Supply	Typ. 1 – 2 bar
Material of Handgun	Mild Steel
Rise Time to generate full Product Pressure	0.01 s
Range of Viscosity	Up to 5000 mPas, preheating to min 35°C
Max. Thrust	5.25 kN at 6.8 bar operating pressure

Dispense Needles, Mixers and Accessories

Illustration / Example	Item No.	Order No.	Pack Size	Colour	Gauge	Inner Ø, mm
Flexible Dispensing Tips: Dispensing Needle, Polypropylene (PPF), Helical Thread						
	97229	142640	50 pcs	Amber	15	1.37
	97230	142641	50 pcs	Green	18	0.84
	97231	142642	50 pcs	Pink	20	0.61
	97232	142643	50 pcs	Red	25	0.25
Tapered Dispensing Tips: Dispensing Needle, Polyethylene – Conical (PPC), Luer-Lock						
	97221	88660	50 pcs	Grey	16	1.19
	97222	88661	50 pcs	Green	18	0.84
	97223	88662	50 pcs	Pink	20	0.61
	97224	88663	50 pcs	Blue	22	0.41
High Precision Dispensing Tips: Dispensing Needle, Stainless Steel Standard (SSS), Luer-Lock						
	97225	88664	50 pcs	Amber	15	1.37
	97226	88665	50 pcs	Green	18	0.84
	97227	88666	50 pcs	Pink	20	0.61
	97228	88667	50 pcs	Red	25	0.25

Additional Dispensing Tips and Mixer Nozzles

Illustration	Item No.	Order No.	Pack Size	Description
	98741	1146079	50 pcs	Dispensing needle, stainless steel – PTFE-lined (SSTL), 25 gauge
	97262	218288	2 each	Needle selection pack: 2 each of a variety of dispensing needles
	K1003100	88805	50 pcs	Formable dispensing tip, 21 gauge / 0.5 mm
	97248	218275	50 pcs	Luer-Lock® tip caps
	97233	88672	20 + 5 pcs	Luer-Lock® adapter kit: 20 Luer-Locks® and 5 adapters
	97207	88656	40 pcs	10 ml clear syringe barrel kit

Additional Dispensing Tips and Mixer Nozzles

Illustration	Item No.	Order No.	Pack Size	Description
	97283	529462	40 pcs	10 ml amber syringe barrel kit, for UV products
	97263	218287	40 pcs	10 ml black syringe barrel kit, for UV and light cure adhesives
	97208	88657	2 pcs	10 ml syringe airline adapter
	97244	88677	20 pcs	30 ml clear syringe barrel kit
	97264	218286	20 pcs	30 ml black syringe barrel kit, for UV and light cure adhesives
	97245	88678	2 pcs	30 ml syringe airline adapter
	97290	397462	50 pcs	All plastic precision dispensing tip, 20 gauge
	984569	1487440	10 pcs	Static mixer for epoxy and PU in 50 ml, SQ 5.3-24
	n.a.	2900614	10 pcs	Static mixer for epoxy and PU in 50 ml, SQ 24
	984570	1487439	10 pcs	Static mixer for epoxy in 200 / 400 ml, SQ 7.5-24
	1034575	1034575	10 pcs	Static mixer MBX 6.5-20-S 10:1 for LOCTITE AA 3038
	n.a.	2447734	10 pcs	Spray mix nozzle for LOCTITE PC 7255 MFQ-08-24C-13
	8953186	1104046	10 pcs	Static mixer 4:1 / 10:1 for 400 / 490 ml, MCX 08-18
	5289010	545996	10 pcs	Static mixer 1:1 for acrylics in 50 ml, MA 6.3-7
	98457	720174	10 pcs	Static mixer 1:1 / 2:1 in 200 / 400 ml, MC 8-24
	863585	367545	10 pcs	Static mixer 1:1 for MS polymers in 410 ml, MC 13-18
	8953187	1104047	10 pcs	Static mixer 4:1 / 10:1 in 400 / 490 ml, MCX 08-24
	8955989	1453183	10 pcs	Static mixer for LOCTITE 3090 and LOCTITE 4070, MLX 2.5-16-5
	n.a.	1826921	10 pcs	Static mixer 1:1 / 2:1 in 50 ml, MBH 3.2-16 S
	n.a.	1573153	10 pcs	Static mixer 1:1 / 2:1 in 50 ml, MBQ 5.0-24 L
	n.a.	1573135	10 pcs	Static mixer 1:1 / 2:1 in 400 ml, MFH 6.0-24 T

Benchtop Robots – Handling Systems

IDH 2104801
LOCTITE EQ RB40 200D
Benchtop Robot

IDH **2104799**
LOCTITE EQ RB40 300D
Benchtop Robot

IDH 2104795
LOCTITE EQ RB40 400D
Benchtop Robot

IDH 2103369
LOCTITE EQ RB40 500D
Benchtop Robot

IDH 1635546
LOCTITE EQ RB10 Rotary
Dispense Table

LOCTITE EQ RB40 Robots
Accessories and Spares

IDH 2104801

LOCTITE EQ RB40 200D Benchtop Robot

Application Field

The LOCTITE EQ RB40 200D Benchtop Robot is designed for adhesive dispensing.

Operation

The LOCTITE 200 D-Series Dispensing Robot has a 200 x 200 x 50 mm range of operation (X,Y,Z) and has features and accessories that are custom tailored for adhesive dispensing processes. The range of operation is 200 mm by 200 mm by 50 mm (X-Y-Z). This unit is fully compliant with RIA (Robotic Industry Association) safety guidelines. Programming accessories, dispensing equipment, integration cables and mounting hardware are sold separately. This low-cost benchtop robot has 3-axis control and 120 VAC or 220 VAC operation with a 24 VDC output signal.

Benefits

- Independent dispense on/off purge control button on front panel allows adhesive to be purged from a dispense valve to prevent curing or for aiding initial set-up
- No special programming required
- Teach Pendant program storage capabilities allows dispense program to be easily transferred from Robot to Robot
- 100 programs, 4,000 points memory per program compact flash card
- Auto-switching power supply 95-132 VAC or 180-250 VAC
- Easily integrates with the LOCTITE Needle Calibration Kit (#1569523) for precise dispense tip location
- Over-speed error indicator prevents Robot from traveling too fast during the execution of the program

- Teach Pendant IDH 2268727 to be ordered separately

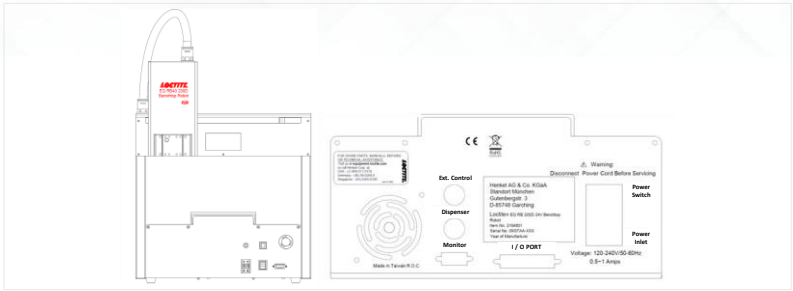

Technical Data	
Dimensions	350mm (W) x 330 mm (D) x 490 mm (H)
Weight	18.0 kg
Nr of controllable Axis	3
Range of Operation	X axis: 200 mm, Y axis: 200 mm, Z axis: 50 mm
Portable Weight	Work Surface: 3.0 kg, Tool Head: 2.0kg
Maximum Speed	PTP (X,Y): 400 mm/s, PTP (Z): 200 mm/s
Repeatability Accuracy	X, Y, Z axis, +/- 0.04 mm, 3 Sigma
CPU	32 bit
Display	Teach Pendant LCD
I/O Signals	8 inputs, 8 outputs
Working Environment	Temperature: 0 °C- 40 °C, Humidity: 20-90 % RH
Items supplied	EQ RB40 200D Benchtop robot, Syringe holder, external shorted connector, dispensing cable, mounting screw for syringe holder, power cord, USB memory stick

LOCTITE EQ RB40 Robots Accessories and Spares

▶ **Accessory Selector**

Click here to watch the demo video!

IDH 2104799

LOCTITE EQ RB40 300D Benchtop Robot

Application Field

The LOCTITE EQ RB40 300D Benchtop Robot is designed for adhesive dispensing

Operation

The LOCTITE 300 D-Series Dispensing Robot has a 300 x 300 x 100 mm range of operation (X, Y, Z) and has features and accessories that are custom tailored for adhesive dispensing processes. This low-cost benchtop robot has 3-axis control and 120 VAC or 220 VAC operation with a 24 VDC output signal. This unit is fully compliant with RIA (Robotic Industry Association) safety guidelines. Programming accessories, dispensing equipment, integration cables and mounting hardware are sold separately.

Benefits

- Independent dispense on/off purge control button on front panel allows adhesive to be purged from a dispense valve to prevent curing or for aiding initial set-up
- No special programming required
- Teach Pendant program storage capabilities allows dispense program to be easily transferred from Robot to Robot
- 100 programs, 4,000 points memory per program compact flash card
- Auto-switching power supply 95-132 VAC or 180-250 VAC
- Easily integrates with the LOCTITE Needle Calibration Kit (#1569523) for precise dispense tip location
- Over-speed error indicator prevents Robot from traveling too fast during the execution of the program

- Teach Pendant IDH 2268727 to be ordered separately

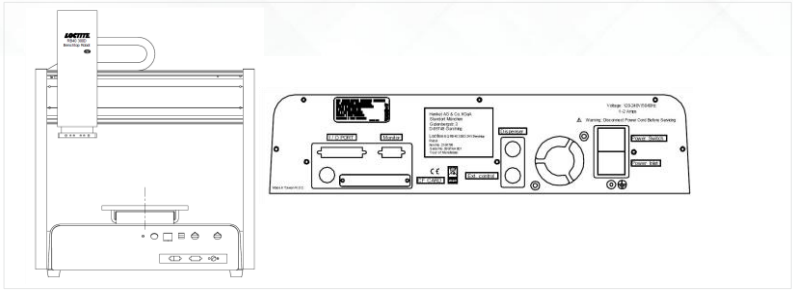

Technical Data	
Dimensions	485mm (W) x 500 mm (D) x 591 mm (H)
Weight	32.0 kg
Nr of controllable Axis	3
Range of Operation	X axis: 300 mm, Y axis: 300 mm, Z axis: 100 mm
Portable Weight	Work Surface: 10.0 kg, Tool Head: 5.0kg
Maximum Speed	PTP (X,Y): 600 mm/s, PTP (Z): 320 mm/s
Repeatability Accuracy	X, Y, Z axis, +/- 0.01 mm, 3 Sigma
CPU	32 bit
Display	Teach Pendant LCD
I/O Signals	8 inputs, 8 outputs
Working Environment	Temperature: 0 °C- 40 °C, Humidity: 20-90 % RH
Items supplied	EQ RB40 300D Benchtop robot, Syringe holder, external shorted connector, dispensing cable, mounting screw for syringe holder, power cord, USB memory stick

LOCTITE EQ RB40 Robots Accessories and Spares

▶ **Accessory Selector**

Click here to watch the demo video!

IDH 2104795

LOCTITE EQ RB40 400D Benchtop Robot

Application Field

The LOCTITE EQ RB40 400D Benchtop Robot is designed for adhesive dispensing

Operation

The LOCTITE 400 D-Series Dispensing Robot has a 400 x 400 x 100 mm range of operation (X,Y,Z) and has features and accessories that are custom tailored for adhesive dispensing processes. This low-cost benchtop robot has 3-axis control and 120 VAC or 220 VAC operation with a 24 VDC output signal. This unit is fully compliant with RIA (Robotic Industry Association) safety guidelines. Programming accessories, dispensing equipment, integration cables and mounting hardware are sold separately.

Benefits

- Independent dispense on/off purge control button on front panel allows adhesive to be purged from a dispense valve to prevent curing or for aiding initial set-up
- No special programming required
- Teach Pendant program storage capabilities allows dispense program to be easily transferred from Robot to Robot
- 100 programs, 4,000 points memory per program compact flash card
- Auto-switching power supply 95-132 VAC or 180-250 VAC
- Easily integrates with the LOCTITE Needle Calibration Kit (#1569523) for precise dispense tip location
- Over-speed error indicator prevents Robot from traveling too fast during the execution of the program

- Teach Pendant IDH 2268727 to be ordered separately

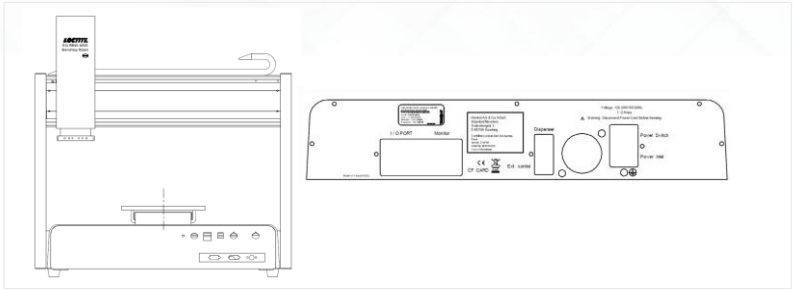

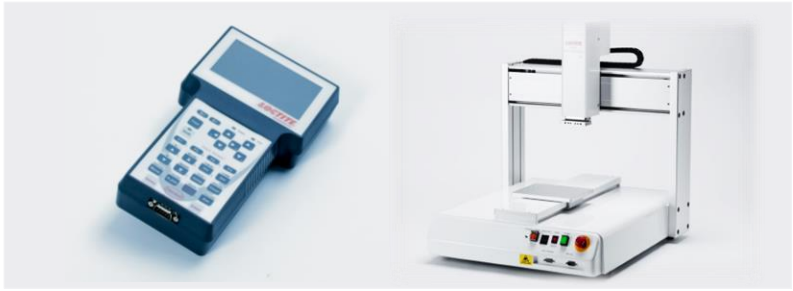

Technical Data	
Dimensions	585mm (W) x 600 mm (D) x 597 mm (H)
Weight	40.0 kg
Nr of controllable Axis	3
Range of Operation	X axis: 400 mm, Y axis: 400 mm, Z axis: 100 mm
Portable Weight	Work Surface: 10.0 kg, Tool Head: 5.0kg
Maximum Speed	PTP (X,Y): 600 mm/s, PTP (Z): 320 mm/s
Repeatability Accuracy	X, Y, Z axis, +/- 0.01 mm, 3 Sigma
CPU	32 bit
Display	Teach Pendant LCD
I/O Signals	8 inputs, 8 outputs
Working Environment	Temperature: 0 °C- 40 °C, Humidity: 20-90 % RH
Items supplied	EQ RB40 400D Benchtop robot, Syringe holder, external shorted connector, dispensing cable, mounting screw for syringe holder, power cord, USB memory stick

LOCTITE EQ RB40 Robots Accessories and Spares

▶ **Accessory Selector**

Click here to watch the demo video!

IDH 2103369

LOCTITE EQ RB40 500D Benchtop Robot

Application Field

The LOCTITE EQ RB40 500D Benchtop Robot is designed for adhesive dispensing

Operation

The LOCTITE 500 D-Series Dispensing Robot has a 500 x 500 x 100 mm range of operation (X,Y,Z) and has features and accessories that are custom tailored for adhesive dispensing processes. This low-cost benchtop robot has 3-axis control and 120 VAC or 220 VAC operation with a 24 VDC output signal. This unit is fully compliant with RIA (Robotic Industry Association) safety guidelines. Programming accessories, dispensing equipment, integration cables and mounting hardware are sold separately.

Benefits

- Independent dispense on/off purge control button on front panel allows adhesive to be purged from a dispense valve to prevent curing or for aiding initial set-up
- No special programming required
- Teach Pendant program storage capabilities allows dispense program to be easily transferred from Robot to Robot
- 100 programs, 4,000 points memory per program compact flash card
- Auto-switching power supply 95-132 VAC or 180-250 VAC
- Easily integrates with the LOCTITE Needle Calibration Kit (#1569523) for precise dispense tip location
- Over-speed error indicator prevents Robot from traveling too fast during the execution of the program

- Teach Pendant IDH 2268727 to be ordered separately

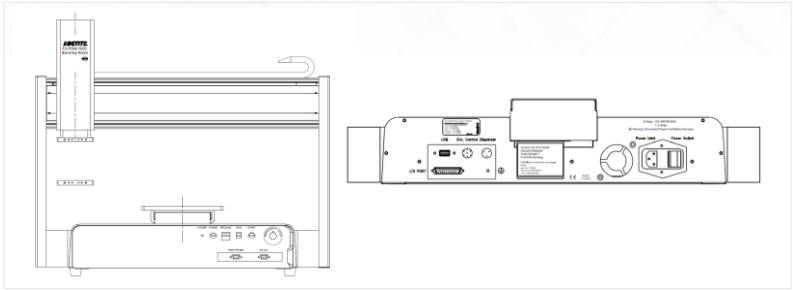

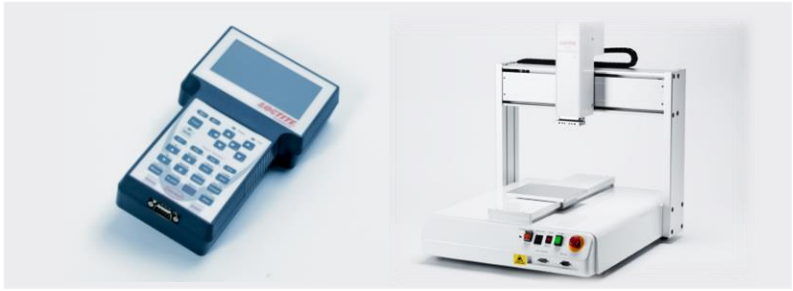

Technical Data	
Dimensions	685mm (W) x 715 mm (D) x 670 mm (H)
Weight	70.0 kg
Nr of controllable Axis	3
Range of Operation	X axis: 500 mm, Y axis: 500 mm, Z axis: 100 mm
Portable Weight	Work Surface: 10.0 kg, Tool Head: 5.0kg
Maximum Speed	PTP (X,Y): 600 mm/s, PTP (Z): 300 mm/s
Repeatability Accuracy	X, Y, Z axis, +/- 0.01 mm, 3 Sigma
CPU	32 bit
Display	Teach Pendant LCD
I/O Signals	8 inputs, 8 outputs
Working Environment	Temperature: 10 °C - 40 °C, Humidity: 20-90 % RH
Items supplied	EQ RB40 500D Benchtop robot, Syringe holder, external shorted connector, dispensing cable, mounting screw for syringe holder, power cord, USB memory stick

LOCTITE EQ RB40 Robots Accessories and Spares

▶ **Accessory Selector**

Click here to watch the demo video!

EQ RB40 Benchtop Robot Accessories

IDH 1328355
30 ml and 55 ml Syringe Holder

IDH 569764
30 ml and 55 ml Syringe Mounting Bracket

IDH 577151
3 3/4" Mounting Bracket Kit

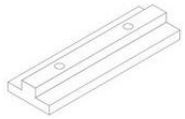

IDH 590762
300 ml Cartridge Mounting Bracket Kit

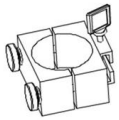

IDH 577150
Dispense **Valve Mounting Bracket (e.g. 98009, 98013)**

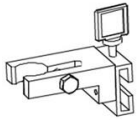

IDH 585942
Dispense **Valve Mounting Bracket (e.g. 97113, 97114)**

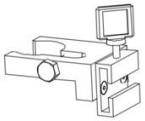

IDH 1329222
Interface Cable

IDH 591031
Solenoid Valve Module

IDH 1569523
Robot Needle Calibration Kit

IDH 2268727
Teach Pendant RB40

IDH 1461974
I/O Junction Box

IDH 591001
Z Height Adjustment Plate

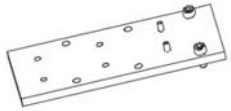

IDH 1053227
Adapter Cable; 9-pin Female

IDH 2148218
ACCE D-Series Robot Software Kit

IDH 1635546

LOCTITE EQ RB10 Rotary Dispense Table

Operation

The LOCTTIE RB10 Rotary Dispense System is a fully integrated system used for dispensing adhesives onto parts in a circular or arc pattern. It will control a syringe system, cartridge, or dispense valve without requiring a separate valve controller. Internally synchronized operation of an advancing slide, turntable, and dispense timer makes for easy and repetitive placement of the adhesive. The set-up is simple, using only preset distance and rotation speed adjustment. No complex programming required!

Benefits

- Integrated Solution – plug and play with LOCTITE valves, reservoirs, and Syringe Systems
- Digital Control of rotation, dispense start, dispense stop and delays
- Adjustable height, position, angle of dispense, and advance slide speed
- Reservoir low-level interface with cycle interruption and display message
- Part position sensing allows orientation of adhesive bead start and end
- Threaded and non threaded mounting holes for fixtures
- Operator lockout for supervisory control of settings
- Dispense valve and syringe mounting hardware available

Technical Data	
Dimensions	305mm (W) x 475 mm (D) x 635 mm (H)
Weight	8.4 kg
Power	Supply: 110 – 230 V / 50 – 60 Hz; Internal 24 VDC
Air In	Clean dry air not to exceed 8.5 bar and filtered with a máximum of 50 micron
Maximum Part Weight	2.7 kg
Rotation Speed	5 – 55 RPM
Items supplied	Rotary Dispense System, Foot Switch, Power Supply with cord, operating manual

Light Cure Equipment

Mercury Cure Systems

Spot Cure Systems

IDH 1465612
97057

IDH 331219
97034

IDH 717763

Flood Cure Systems

IDH 982317
97053

IDH 805741
97055

IDH 838778
97056

LED Cure Systems

Spot Cure Systems

IDH 2182210/2182207
EQ CL32

IDH 2804936
EQ **CL40**

Flood Cure Systems

IDH 1359255
EQ CL30

IDH 2257357
EQ CL30 Quad

IDH 2804957
EQ **CL42 Dual**

IDH 2804959
LED Chamber

Light Cure Measurement

IDH 1406024
7020

IDH 2436352
EQ PM20

IDH 2436353
EQ PM20

LOCTITE®

IDH 2182210 / 2182207

LOCTITE EQ CL32 LED Spot 365nm / 405 nm

Application Field

The EQ CL32 LED Spot is designed for use with light cure products that cure when exposed to ultraviolet and/or visible light.

Operation

The LOCTITE EQ CL32 LED Spot is a high powered, portable LED light source capable of consistently curing light cure products that respond to UV/visible light. This system is offered in both 365 nm and 405 nm wavelengths and can be used in either hand-held or stationary applications. Due to its unique LED technology, the EQ CL32 LED Spot provides instant on/off performance and consistent light output. The system's focused spectral output significantly reduces IR emission, resulting in minimal heat exposure to parts and assemblies. This focused output also minimizes the amount of ultraviolet energy that the system irradiates, significantly reducing UV exposure risk. The EQ CL32 LED Spot can be run on rechargeable batteries or while connected to a wall plug adapter, allowing for operation as either a portable unit or mounted unit with remote on/off capability. Due to its small size, light weight and portability, EQ CL32 is perfect for applications in confined areas and hard to reach joints.

LOCTITE EQ CL32 365nm IDH 2182210
LOCTITE EQ CL32 405nm IDH 2182207

Benefits

Handheld and stationary unit in one device.

- Robust aluminum housing.
- Ergonomic finger switch.
- Rechargeable using mini-USB adapter..
- Long focus length to allow for maximum flexibility.
- 100 % Duty Cycle when operated by wall power (stationary mount)

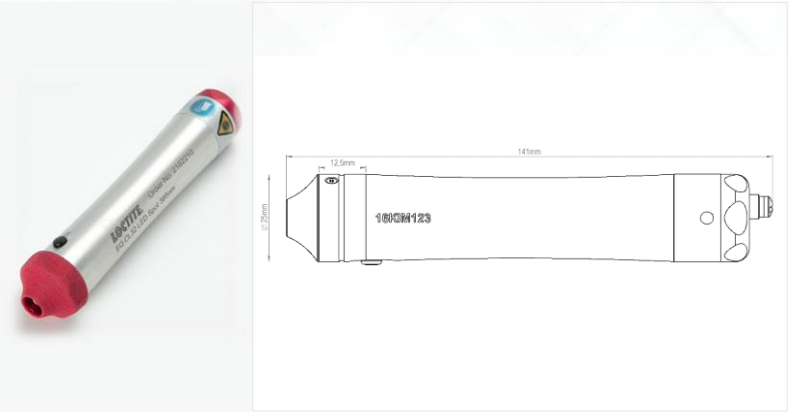

Technical Data	
Dimensions	139 mm (L) x max. 30.3 mm (Dia.)
Weight	0.11 kg
Operating Time	Cordless: up to 3 h; permanently Powered: limited by safety features
Battery	Li-Ion, 3.6 V, 2250 mAh, 8.1 Wh, exchangeable by LOCTITE service
Charging Time	< 4.0 h
Length USB Cable	Max. 2 m
UV DATA	
365 nm Wavelength	365 nm IDH 2182210
Output	Min 2.6 W/cm2 at 10 mm distance
Irradiation Area	5 mm (rounded square shaped)
Homogeneity of Irradiation Area	± 50% within specified field
LED Lifetime	>6000 h @ 80 % emission
405 nm Wavelength	405 nm IDH 21822070p
Output	Min. 3.0 W / cm2 at 10 mm distance
Irradiation Area	5 mm (rounded square shaped)
Homogeneity of Irradiation Area	± 50% within specified field
LED Lifetime	6000 h @ 80 % emission
Items supplied	EQ CL32 LED Spot, AC adaptor/Charger USB, USB-A to mini USB cable (length 1.8m, Tip Guard rubber, Operating Manual

IDH 1359255

LOCTITE EQ CL30 Flood Cure System

Application Field

The LOCTITE EQ CL30 Flood Cure System is designed for UVA, and UVV curing products.

Operation

The LOCTITE CL30 LED Flood System is a high intensity flood system specially designed for curing LOCTITE UV and Visible Light Cure adhesives. The modular configuration consists of an LED head with connection cable and controller (ordered separately). The system is offered in either 365 or 405 nm wavelengths. Each CL30 head is equipped with 144 high power LED's and integrated reflectors, providing uniform curing across a wide area (100 mm x 100 mm). The heads can also be stacked side by side in two directions further expanding the curing area for maximum flexibility. The expected lifetime of the LED's is more than 20000 hours under normal operating conditions. The CL30 system is compatible with manual workstations as well as automated production lines.

Benefits

Lasts up to 10 times longer than traditional arc lamps

- 100% of the emitted light is within the range of the curing spectra of the adhesive (when compared to Mercury vapor arc lamps)
- Energy efficient, LEDs produce little wasted energy
- Each LED head has been optimized for its specific wavelength (365 nm, 405 nm)
- Air cooling system maintenance free

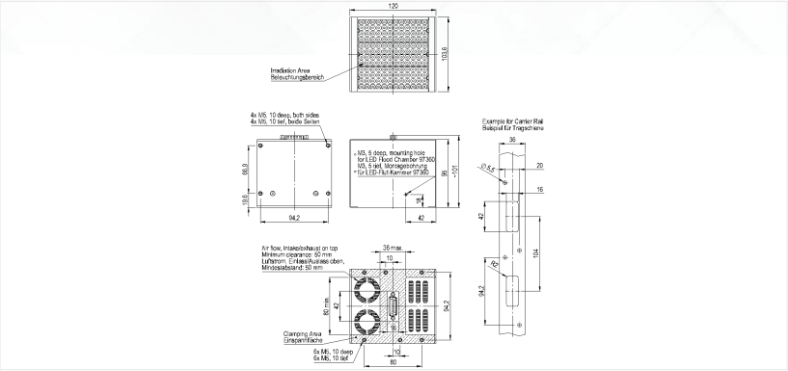

Technical Data	
Weight	1.5 kg
Recommended Working Distance	25 – 75 mm
Peak Intensity (Distance 50 mm)	>800 mW/cm² for 365 nm
	>1500 mW/cm² for 405 nm
Wavelength	365 nm or 405 nm
Continuous Noise Level	< 70 dB(A)

System Components IDH #	
LED Flood Controller 97104/1359255	
EQ CL30 LED Flood Head 365 nm / 2139182	EQ CL30 LED Flood Head 405 nm / 2139180

IDH 2257357

LOCTITE EQ CL30 LED Flood System Quad Controller

Application Field

The LOCTITE EQ CL30 LED Flood System Quad Controller is designed for UVA, and UVV curing products.

Operation

This LOCTITE LED Flood Quad Controller supplies power and control for up to four (4) LOCTITE LED Flood Arrays.

Choose from wavelength (the LED Flood Array wavelength is selected according to the curing requirements of the adhesive):

365 nm, item #2139182

405 nm, item #2139180

Product Features

- Capacity for up to four UV LED heads
- Intensity adjustment for each channel
- Works with Loctite CL30 LED Flood heads
- Touch screen HMI
- 3 running modes: Timer, Level and Advance
- 3 languages: English, German and Chinese
- Environmentally friendly

Benefits

- Touch screen operation panel, easy to use
- Energy efficient, LEDs produce little wasted energy
- Friendly user interface
- Increased productivity, maintenance free
- Lower cost of ownership
- Less energy required, lower operating cost
- Easy integration

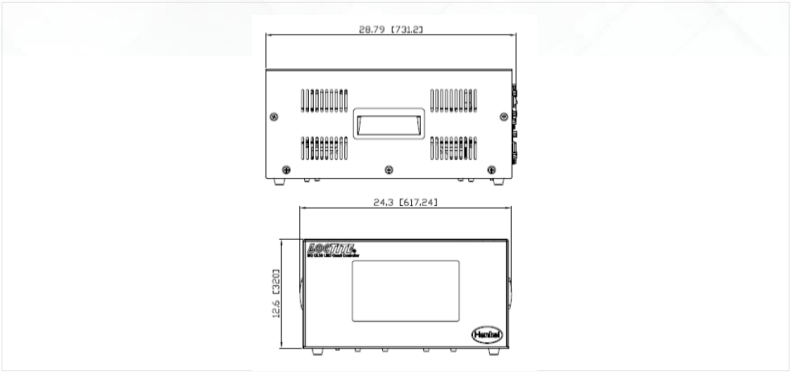

Technical Data	
Weight	14 kg
Dimensions (L x H x W)	600 x 340 x 733.2 mm
Operating voltage	110~240 VAC 50/60Hz
Power consumption	1500 Watts
Wavelength	365 nm or 405 nm

System Components IDH #	
EQ CL30 LED Flood Quad Controller / 2257357	
EQ CL30 LED Flood Head 365 nm / 2139182	EQ CL30 LED Flood Head 405 nm / 2139180

IDH 2804936

LOCTITE EQ CL40 LED Quad Controller

Application Field

The LOCTITE EQ CL40 Quad LED Controller is a UV-LED spot light source that emits UV light at 365 or 405 nm. The Quad Controller includes a footswitch and AC power cord. The required LED head is purchased separately. The maximum number of LED heads that can be installed is four (4) units allowing for multiple cure areas. This system is suitable for manual workstations as well as integration into automated production lines. The EQ CL40 Quad LED Controller can be operated in a continuous light output mode or up to a 7-step, programmed output mode where the light output intensity and time can be programmed for each separate LED head. The cycle can be initiated with the start/stop button on the front panel; a footswitch (included); or via a PLC connection with an external start signal. This LED light source causes no thermal damage or harmful effects to objects being illuminated. Its low power consumption makes it an energy-saving and environmentally friendly light source. No light guides or lamp replacements are required.

Product Features

- Instant on-off capabilities; no warm-up time required as compared to mercury-arc lamp UV Wand systems
- Can operate up to four (4) LED heads
- Each LED head can be programmed independently to have a 7-step setting for UV intensity and exposure time
- Provides five programming modes (constant intensity; pulsed; step; optical; manual)
- Each channel is adjustable and can be controlled separately
- Temperature feedback to eliminate LED heads overheating

NEW

Technical Data	
Weight	2 kg
Dimensions (L x H x W)	99 x 162 x 126 mm
Operating voltage	24 VDC (60 W Adapter)
Power consumption	< 35 Watts
Wavelength	365 or 405 nm

System Components IDH #	
EQ CL40 LED Quad Controller / 2804936	
EQ CL40 LED Spot Head 365nm 6mm / 2804938	EQ CL40 LED Spot Head 405nm 6mm / 2804937

LOCTITE®

IDH 2804957

LOCTITE EQ CL42 LED Dual Controller

Application Field

The LOCTITE EQ CL42 Dual LED Controller is a UV-LED flood light source that emits UV light at 365 or 405 nm. The Dual Controller includes a footswitch and AC power cord. The required LED head is purchased separately. This system is suitable for manual workstations as well as integration into automated production lines. The EQ CL42 Dual LED Controller can be operated in a continuous light output mode or up to a 7-step, programmed output mode where the light output intensity and time can be programmed for each separate LED head. The cycle can be initiated with the start/stop button on the front panel; a footswitch (included); or via a PLC connection with an external start signal. This LED light source causes no thermal damage or harmful effects to objects being illuminated. Its low power consumption makes it an energy saving and environmentally friendly light source. No light guides or lamp replacements are required.

Product Features

- Capacity for up to two UV LED heads
- Intensity adjustment for each channel
- Works with Loctite EQ CL42 LED Flood heads
- Touch screen HMI
- 3 running modes: Timer, Level and Advance
- Environmentally friendly
- Touch screen operation panel, easy to use
- Friendly user interface
- Increased productivity, maintenance free
- Lower cost of ownership
- Less energy required, lower operating cost
- Easy integration

NEW

Technical Data	
Weight	14 kg
Dimensions (L x H x W)	218 x 123 x 307 mm
Operating voltage	110~240 VAC 50/60Hz
Power consumption	1100 Watts
Wavelength	365 nm or 405 nm

System Components IDH #	
EQ CL42 LED Dual Controller / 2804957	
EQ CL42 LED Flood Module 365nm / 2804955	EQ CL42 LED Flood Module 405nm / 2804956

LOCTITE®

IDH 2804955 / 2804956

LOCTITE EQ CL42 LED Flood 365 / 405

Application Field

The EQ CL42 LED Flood System is a high intensity flood system specially designed for curing LOCTITE UV and Visible Light Cure adhesives. The modular configuration consists of an LED head with connection cable and controller (ordered separately). The system is offered in either 365 or 405 nm wavelengths. Each EQ CL42 head is equipped with 120 high power LED's and integrated reflectors, providing uniform curing across a wide area (100 mm x 100 mm or 4 inches by 4 inches). The expected lifetime of the LED's is more than 20000 hours under normal operating conditions. The system is compatible with manual workstation as well as automated production lines. It can be operated via a footswitch or a PLC and run in either timer or continuous mode.

NEW

Product Features

- High UV intensity – Up to 2.5 W/cm2
- LED heads stackable in two directions
- Expected LED life over 20,000 hours (30% intensity decay) with proper handling
- 100% duty cycle
- Instant on/off, no heat up or cool down necessary
- Optimal curing distance: 50 mm
- Compact system with integrated air cooling
- Requires LED Flood Controller, sold separately
- Temperature monitor of LEDs

Technical Data	
Weight	14 kg
Dimensions (L x H x W)	120 x 120 x 123
Peak Intensity (WD 50 mm)	> 1700 mW/cm² for 365 > 2600 mW/cm² for 405
Noise level	< 70 dBA (Distance 1 m)
Wavelength	365 nm or 405 nm

LOCTITE®

IDH 2804959

LOCTITE LED Flood Chamber

Application Field

The LED Flood Chamber has been designed especially for the use with the LOCTITE EQ CL42 LED Flood systems. It consists out of a chamber with adapter for one or two LED heads, work piece holder, door safety system, ESD safe door with window and a controller connection. The Flood systems are to be started from the controller as usual. The chamber system is meant for the use at manual working places. The inside of the chamber is made of polished stainless steel to make the stray light useable.

The LED Flood system (365 or 405 nm) must be chosen fitting to the filter attributes of the substrates to bond and the spectral sensitivity of the adhesive. The LED Flood system has to be ordered separately.

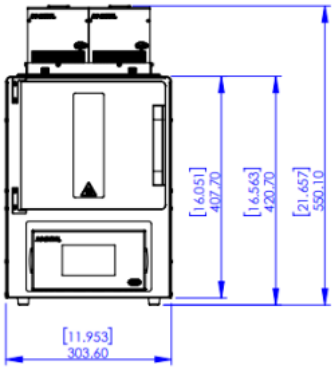

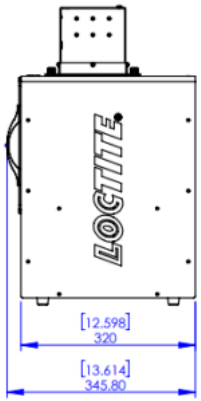

NEW

Technical Data	
Weight	3.5 kg
Dimensions (L x H x W)	303 x 420 x 345 mm
Internal voltage	24 VDC
Workpiece dimensions	240 x 190 x 210 mm
Radiation area	100 x 100 mm at 50 mm Work Distance

LOCTITE®

IDH 982317

LOCTITE 97053 UV Hand Lamp 250W

Application Field

The LOCTITE 97053 UV hand lamp 250W has been designed exclusively for curing LOCTITE UV adhesives or coatings.

Operation

The UV Hand Lamp 250W is a mobile lamp system for curing UV adhesive. It is used for curing larger components where a portable curing device is required. The Dichroidic reflector reflects only UVA and a small amount of visible light. The IR radiation can pass through and the resulting heat is sucked out of the lamp by a fan. Radiation spectrum and performance provided by the lamp are especially matched to the requirements of LOCTITE UV A curing adhesives and coating materials. Exposure time has to be determined by testing to ensure precise results .As with all UV lamps of this type, the intensity of light will decline with time as the electrodes deteriorate and burnt tungsten is deposited on the lamp housing.

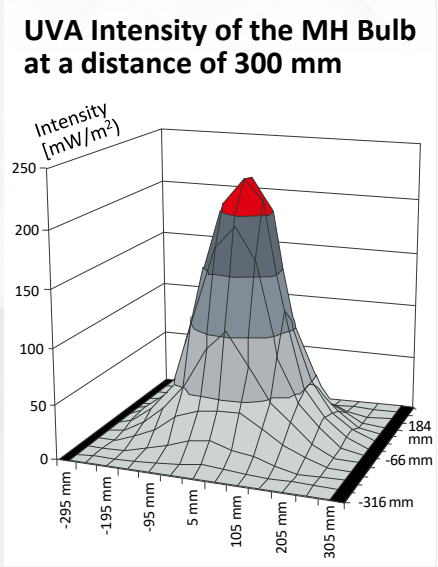

Technical Data	
Dimensions	
▪ **Hand Lamp**	121 mm (H) x 146 mm (W) x 230 mm (D)
▪ **Controller**	120 mm (H) x 150 mm (W) x 260 mm (D)
Weight	
▪ **Lamp Part**	2.0 kg
▪ **Controller**	4.0 kg
Power Supply	230 VAC +/-10 %, 50 Hz
Power Consumption	250 W
Fuse	6.3 AT, 5 x 20
Items supplied	97053 UV Hand Lamp (including lamp and power supply)
	Power cord
	Safety glasses
	Safety gloves
	Operating Manual

IDH 1465612

LOCTITE 97057 FB UVA Spot Cure System

Application Field

The LOCTITE 97057 FB UV Light Guide System is designed for curing LOCTITE UV adhesives and coatings with UVA and visible light.

Operation

The LOCTITE UV Light Guide System is a high-power lamp system. The unit is equipped with an integrated UV monitoring system, an automatic intensity feedback control, a PLC connection for integration into an automatic line, an LCD display for menu guidance and a controlled cooling system.

Technical Data	
Dimensions	340 mm (W) x 160 mm (H) x 310 mm (D)
Weight	7.5 kg
Power Supply	110 - 240 V AC, 50-60 Hz
Power Consumption	Max. 380 VA
Current Consumption	Max. 3.3 A
Fuse	2 x 3,15A time lag
Lifetime of the Bulb	Up to 3000 hours
Bulb Type	120 W Calotte lamp
Items supplied	97057 FB UVA Spot Cure system
	Footswitch
	15 pin SubD connector
	Power cord
	Safety glasses
	Liquid light guide (TO BE ORDERED SEPARATELY)

Selector Chart

Light guide for 97057 & 97058	Item #	IDH No.	Accessories / Spare Parts	Item #	IDH No.	Light guide for 97034	Item #	IDH No.
UVA ø 5 x 1500mm	97323	376720	**UVA lamp module for 97058**	97317	951638	**UVC ø 5 x 1000mm**	97326	329278
UVA ø 8 x 1500mm	97324	298849	**UVA lamp module for 97057**	97317	951638	**UVC ø 8 x 1000mm**	97327	376721
UVA 2 x ø 3 x 1500mm	97318	951637	**UVC lamp module for 97034**	97322	354963	**UVC 2 x ø 3 x 1000mm**	97328	352194
UVA Light Guide Intensity Meter	7020	1406024	**UV Protection Glasses**	8953426	1175127			

IDH 331219

LOCTITE 97034 UVC Light Guide System

Application Field

The LOCTITE 97034 UVC Light Guide System is designed for curing Loctite UV adhesives and coatings with UVC and UVA light.

Operation

The LOCTITE UVC Light Guide System is equipped with an integrated UV monitoring system, a PLC connection for integration into an automatic line, an LCD display for menu guidance and a controlled cooling system.

Technical Data	
Dimensions	340 mm (W) x 160 mm (H) x 310 mm (D)
Weight	7.5 kg
Power Supply	110 - 240 V AC, 50-60 Hz
Power Consumption	Max. 380 VA
Current Consumption	Max. 3.3 A
Fuse	2 x 3,15A time lag
Lifetime of the Bulb	Up to 3000 hours
Bulb Type	120 W Calotte lamp
Items supplied	97034 UVC Spot Cure system,
	Footswitch
	15 pin SubD connector
	Power cord
	Safety glasses
	Liquid light guide (TO BE ORDERED SEPARATELY)

Selector Chart

Light guide for 97057 & 97058	Item #	IDH No.	Accessories / Spare Parts	Item #	IDH No.	Light guide for 97034	Item #	IDH No.
UVA ø 5 x 1500mm	97323	376720	**UVA lamp module for 97058**	97317	951638	**UVC ø 5 x 1000mm**	97326	329278
UVA ø 8 x 1500mm	97324	298849	**UVA lamp module for 97057**	97317	951638	**UVC ø 8 x 1000mm**	97327	376721
UVA 2 x ø 3 x 1500mm	97318	951637	**UVC lamp module for 97034**	97322	354963	**UVC 2 x ø 3 x 1000mm**	97328	352194
UVA Light Guide Intensity Meter	7020	1406024	**UV Protection Glasses**	8953426	1175127			

IDH 805741

LOCTITE 97055 UVALOC 1000 Chamber Version

Application Field

The UVALOC 1000 is a 1000 W lamp system designed exclusively for curing LOCTITE UV adhesives or coatings.

Operation

The 97055 UVALOC 1000 is a high-performance lamp system for curing UV adhesive. The chamber version (97055) is a closed system. It is used for applications permitting manual loading of the cure chamber. Radiation spectrum and performance provided by the lamp are especially matched to the requirements of LOCTITE UV curing adhesives and coating materials. Completely dry, non-tacky surfaces can be achieved rapidly. Exposure times can be preset in 1 s steps to ensure precise repeatability of curing results. Exposure time has to be determined by testing to ensure precise results The UVALOC 1000 is a closed system with safety door locking and a programmable controller. The door is made out of 'smoked' polycarbonate, which secures 100% protection of UV radiation. The UVALOC 1000 can be operated with 500 W and 1000 W. At the programmable controller the bulb hours, the unit hours and the UV intensity can be monitored. The UVALOC 1000 is equipped with a cooling system, a pneumatic shutter system and an emergency stop button.

Benefits

- Standard unit supplied with a 1,000 W medium pressure mercury arc lamp to provide good tack-free and depth cure
- Optional Visible light bulb for plastic bonding
- Optional iron-doped bulb for maximum depth of cure
- Repeatable and exact curing results due to adjustable opening times of the shutter
- Complete shielding of operator from exposure to UV light
- High degree of occupational safety due to pneumatically operated shutter
- High process safety due to the integrated UV monitoring system

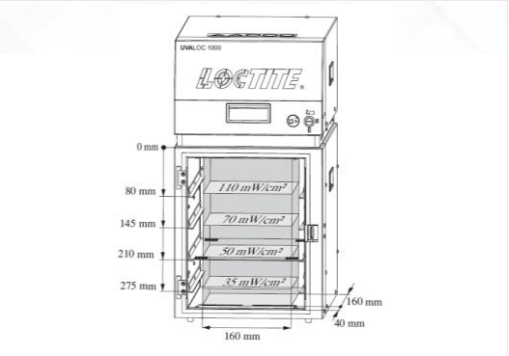

Technical Data	
Dimensions (width x height x depth)	
▪ **Lamp module**	305 mm x 211 mm x 490 mm
▪ **Controller**	305 mm x 170 mm x 525 mm
▪ **Cure Chamber**	305 mm x 385 mm x 480 mm
▪ **Cure chamber internal**	232 mm x 307 mm x 352 mm
Weight	
▪ **Controller**	13 kg
▪ **Cure chamber with lamp housing**	12.5 kg
▪ **Lamp Housing**	8.0 kg
Power Supply	230 V AC, 50 Hz, min. 210 V AC, 50 Hz
Power Consumption	Approx. 1200 W
Lamp Power	500 W / 1000 W, standby 500 W
Power Fuse	10 AT/250V; glass tube miniature fuse 5 x 20 mm
Concentration Work Place (MAK) Ozone	Start with cold bulb: ~ 0,1 ppm; During operation: ≤ 0,05 ppm
Internal Control Voltage	Internal Control Voltage
Pneumatic supply	4 – 6 bar (60 – 90 PSI)
UV lamp warm-up time	approx. 90 seconds
Irradiated Area	160 x 160 mm
Items supplied	97055 Uvaloc 1000 Controller, Lamp housing, Curing chamber, UV Bulb (mercury), Connector cord, Power cable, Footswitch, Operating Manual

LOCTITE®

IDH 838778

LOCTITE 97056 UVALOC 1000 Tunnel Version

Application Field

The UVALOC 1000 is a 1000 W lamp system designed exclusively for curing LOCTITE UV adhesives or coatings.

Operation

The UVALOC 1000 is suitable for the UVA, UVC and visible light curing of Loctite UV products. The 97056 tunnel version is designed for integration into automatic and or semi automatic production lines. The lamp's emission spectrum and radiant power capacity have been designed specifically to meet the requirements of UV-curable Loctite adhesives. At the programmable controller the bulb hours, the unit hours and the UV intensity can be supervised. The UVALOC 1000 is equipped with a cooling system, a pneumatic shutter system and an emergency stop button. The tunnel version 97056 is equipped with a PLC connection at the controller, an UV sensor and a parabolic reflector in the lamp housing.

The tunnel version 97056 is equipped with a PLC connection at the controller, an UV sensor and a parabolic reflector in the lamp housing.

Benefits

- Standard unit supplied with a 1,000 W medium pressure mercury arc lamp to provide good tack-free and depth cure
- Optional Visible light bulb for plastic bonding
- Optional iron-doped bulb for maximum depth of cure
- Repeatable and exact curing results due to adjustable opening times of the shutter
- High process safety due to the integrated UV monitoring system

Technical Data	
Dimensions (width x height x depth)	
▪ **Lamp module**	305 mm x 211 mm x 490 mm
▪ **Controller**	305 mm x 170 mm x 525 mm
Weight	
▪ **Controller**	13 kg
▪ **Lamp Housing**	8.0 kg
Power Supply	230 V AC, 50 Hz, min. 210 V AC, 50 Hz
Power Consumption	Approx. 1200 W
Lamp Power	500 W / 1000 W, standby 500 W
Power Fuse	10 AT/250V; glass tube miniature fuse 5 x 20 mm
Concentration Work Place (MAK) Ozone	Start with cold bulb: ~ 0,1 ppm; During operation: ≤ 0,05 ppm
Internal Control Voltage	Internal Control Voltage
Pneumatic supply	4 – 6 bar (60 – 90 PSI)
UV lamp warm-up time	approx. 90 seconds
Irradiated Area	160 x 160 mm
Items supplied	97055 Uvaloc 1000 Controller, Lamp housing, UV Bulb (mercury), Connector cord, Power cable, Footswitch, Operating Manual

LOCTITE®

IDH 1406024

LOCTITE 7020 UVA Spot Radiometer

Application Field

The LOCTITE 7020 UVA Spot Radiometer is designed to measure and display the UV power density (irradiance) emitted by a UV spot curing system

Operation

The LOCTITE 7020 UVA Spot Radiometer is a self-contained, electro-optic instrument designed to measure and display the UV power density (irradiance) emitted by a UV spot curing system. The units displayed are watts per square centimeter. Decreased radiant power related to the degradation of UV lamps, light guides and reflectors can result in declines in process efficiency or incomplete curing of Loctite Light Cure products. The Radiometer is designed to provide the operator with instant feedback as to the performance of the spot curing system based upon changes in the irradiance.

Calibration required 12 months after first use (then annually)

Benefits

- Monitor UV spot curing system performance
- Measure individual UV lamp performance
- Measure light guide degradation
- Optimize light guide positioning
- Determine proper UV intensity required for curing various materials
- Meet ISO-9000 requirements
- Includes Adapters for 3 mm, 5 mm, and 8 mm size lightguides

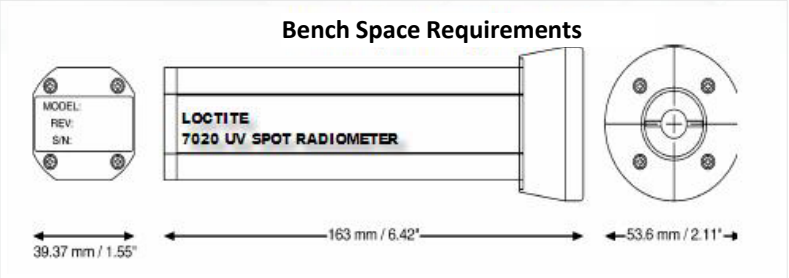

Technical Data	
Dimensions	163 mm (L) x 53.6 mm (D); Head: 39.37 mm (D)
Weight	0.363 kg
Power Source	Lithium Battery Stick
Battery Life	12,500 hours continuous operation
Case Material	aluminum, polyester and quartz
Spectral Range	320 to 390 nm (UVA region)
Resolution	10mW/cm^2
Items supplied	7020 UVA Spot Radiometer

IDH 2436352

LOCTITE EQ PM20 UV VIS Radiometer

Application Field

The LOCTITE EQ PM20 UV VIS Radiometer is designed to measure UV light source outputs including LOCTITE UV LED light sources, conveyor, flood, spot, and UV lamps.

Operation

The LOCTITE EQ PM20 UV VIS Radiometer is an industry first for measurement of LED Light Curing devices. The flat response curve makes this radiometer uniquely qualified to measure narrow band wavelengths of LED Light Curing devices. The Radiometer can also be used with Curing Chambers, Conveyors, and Flood lamps. This unit combines the all-in-one exposure, intensity measurement, and profile memory capability into one device.

Calibration required 12 months after first use (then annually)

Benefits

- Solid-state detector and ultra-stable amplifier technology to give lower noise, greater speed, and higher accuracy.
- Digital display of peak intensity and total exposure
- Graphical display of intensity vs. time.
- Baseline profile reference plot allows on-the-spot comparison of the current performance of the curing unit with the base line.
- Built-in rechargeable battery with USB cable included

Technical Data	
Dimensions	152.4 mm (W) x 191.6 mm (D) x 12.7 mm (H)
Spectral Measurements Range	Total Range: 350 – 660 nm, LED Range: 395 – 620 nm
Intensity Dose Range	5 mW/cm sq. to 20 W/cm^2
Accuracy	Typically, better than 6%
Digital Display	4 significant digits
Items supplied	LOCTITE EQ MP20 UV Radiometer
	Micro USB charging / data cable
	Equipment instructions
	Certificate of Calibration
	Meter storage / shipping case

IDH 2436353

LOCTITE EQ PM20 UV AB Radiometer

Application Field

The LOCTITE EQ PM20 UV AB Radiometer is designed to measure UV light source outputs including LOCTITE UV LED light sources, conveyor, flood, spot, and UV lamps.

Operation

The LOCTITE EQ PM20 UV AB Radiometer is an industry first for measurement of light sources and LED Light Curing devices that emit in the UVA & UVB wavelengths. The flat response curve makes this radiometer uniquely qualified to measure UVA & UVB wavelengths. The Radiometer can also be used with Curing Chambers, Conveyors, and Flood lamps. This unit combines the all-in-one exposure, intensity measurement, and profile memory capability into one device.

Calibration required 12 months after first use (then annually)

Benefits

- Solid-state detector and ultra-stable amplifier technology to give lower noise, greater speed, and higher accuracy.
- Digital display of peak intensity and total exposure
- Graphical display of intensity vs. time.
- Baseline profile reference plot allows on-the-spot comparison of the current performance of the curing unit with the base line.
- Built-in rechargeable battery with USB cable included

Technical Data	
Dimensions	152.4 mm (W) x 191.6 mm (D) x 12.7 mm (H)
Spectral Measurements Range	Total Range: 280 – 405 nm, LED Range: 320 – 395 nm
Intensity Dose Range	5 mW/cm sq. to 20 W/cm^2
Accuracy	Typically, better than 6%
Digital Display	4 significant digits
Items supplied	LOCTITE EQ MP20 UV Radiometer
	Micro USB charging / data cable
	Equipment instructions
	Certificate of Calibration
	Meter storage / shipping case

IDH 717763

LOCTITE UV & Visible Safety Glasses

Application Field

The LOCTITE Safety Glasses for UV and Visible Light, is a polycarbonate, yellow-tinted lens designed to absorb specific wavelengths of radiant energy into the lens to protect the user from harmful ultraviolet and visible light energy. While the primary need for eye protection is often impact hazards, many work applications also include radiation hazards including ultraviolet, infrared, and visible light glare. The Safety Glasses for UV and Visible light fully comply with CE certification standards.

Product Features

- Absorbs >99.9% of potentially harmful UVA and UVB radiation.
- Provides protection by completely absorbing visible light up to 440nm
- The user's contrast is improved, and the eye finds it easier to see detail.
- The orange lens color filters out Visible light in the violet and blue areas of the spectrum.

Technical Data

- Color: Yellow
- UV Absorption: > 99.9%
- Meets EN 166-3 (included EN 172) specifications
- Lens material: polycarbonate

Sample No.		Ultraviolet spectral range			Visible spectral range	Enhanced infrared absorption	Assessment
		Spectral transmittance		Mean value of spectral transmittance	Luminous transmittance	Maximum value of Solar infrared transmittance	
		280nm to 315nm	315nm to 350nm	315nm to 380nm	380nm to 780nm	780nm to 2000nm	
1	Left	0.06%	0.03%	0.00%	86.76%	/	Pass
	Right	0.08%	0.06%	0.02%	86.71%	/	Pass
2	Left	0.07%	0.05%	0.00%	86.67%	/	Pass
	Right	0.06%	0.06%	0.02%	86.46%	/	Pass
3	Left	0.07%	0.06%	0.00%	86.55%	/	Pass
	Right	0.05%	0.06%	0.00%	86.95%	/	Pass

Air Filter Systems

IDH 494964 LOCTITE 97612 Air Filter Trolley	IDH 527595 LOCTITE 97603 Air Filter System LAS 250

IDH 494964

LOCTITE 97612 Air Filter Trolley

Application Field

The LOCTITE 97612 Air Filter Trolley is designed for health and environment protection at bonding workplaces.

Operation

The LOCTITE Air Filter Trolley is a robust device for the mobile and stationary workshop and industrial use. It is suitable for exhausting and filtering gases, vapors and odors in the workplaces. Released, gases and vapors, are captured by suction elements immediately at the workstation and then filtered with the Filter Trolley. The clean air can be supplied back to the working premises. Not valid for carcinogenic substances!

Benefits

- High impact ABS housing
- Resistant to chemicals and corrosion
- Adjustable discharge direction
- Adjustable flow rate
- Low noise level
- Compact design
- High performance fan, minimum energy consumption
- High capacity filter (can be recycled)
- Easy operation, servicing and filter replacement
- Long life brushless electric motor

Technical Data	
Dimensions	450 mm (W) x 530 – 860 mm (H) x 340 mm (D)
Weight	18.0 kg
Power Supply	230 VAC, 50 Hz
Power Consumption	150 W
Power Protection	5 A, time-lag
Max. Air Flow	170 m3/h
Constant Air Flow	80 m3/h at 1400 Pa
Max. Vacuum	Max. 2800 Pa
Relative Humidity for Storage	50 %
Items supplied	97612 Filter Trolley
	Power cord
	Operating Manual

System	Item #	IDH No.	System	Item #	IDH No.
Benchtop Suction Arm, 3 joints, maximum range 950mm, including hood	8991090	503370	**Hose with fitting, 2 metre**	8991091	529639
Y splitter (for connecting 2 hoses)	8991096	529643	**Filter for Trolley 97612 New**	97968	267469
Suction hood transparent	8955065	1034999			

LOCTITE®

IDH 527595

LOCTITE 97603 Air Filter System LAS 250

Application Field

The LOCTITE 97603 Air Filter System LAS 250 system is suitable for exhausting and filtering gases, vapors and odors in the workplaces.

Operation

The LOCTITE 97603 Air Filter System exhausts the polluted air and blows out the cleaned air at the air outlet. The combination of pre-filter and activated carbon guarantees a high filtration efficiency of unhealthy gases, vapor and fumes. The large surface area and small particle size of the actuated carbon maximizes absorption of polluted air.

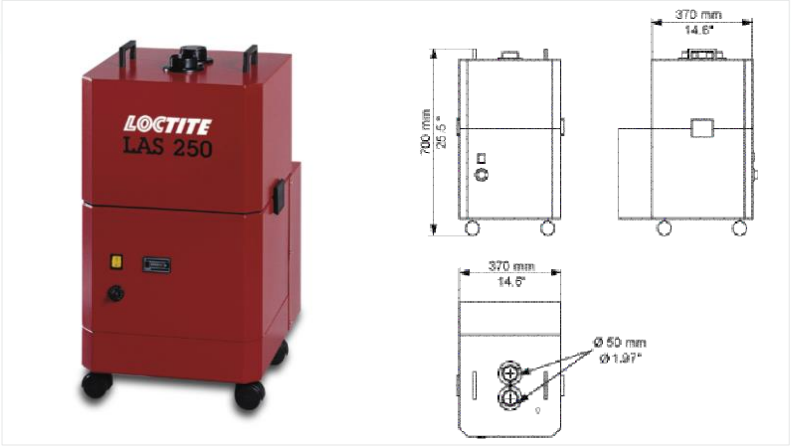

Technical Data			
Dimensions	370 mm (W) x 780 mm (H) x 500 mm (D)		
Weight	40.0 kg		
Temperature	Operating: +10°C – +45°C (50°F – 113°F)		
Power Supply	230 VAC, 50 Hz		
Power Consumption	370 W		
Max. Air Flow	40 m3/h		
Constant Air Flow	250m3/h at 2200 Pa		
Max. Vacuum	2600 Pa		
Relative Humidity for Storage	Max. 50%		
Noise Level	52 dB (A)		
Items supplied	97603 Air filter system LAS 250	Power cord	Operating Manual

System	Item #	IDH No.	System	Item #	IDH No.
Benchtop Suction Arm, 3 joints, maximum range 950mm, including hood	8991090	503370	**Hose with fitting, 2 metre**	8991091	529639
Y splitter (for connecting 2 hoses)	8991096	529643	**Filter for LAS 250 97603 New**	97968	267469
Suction hood transparent	89955065	1034999			

Dispense Needles, Mixers and Accessories

Illustration / Example	Item No.	Order No.	Pack Size	Colour	Gauge	Inner Ø, mm
Flexible Dispensing Tips: Dispensing Needle, Polypropylene (PPF), Helical Thread						
	97229	142640	50 pcs	Amber	15	1.37
	97230	142641	50 pcs	Green	18	0.84
	97231	142642	50 pcs	Pink	20	0.61
	97232	142643	50 pcs	Red	25	0.25
Tapered Dispensing Tips: Dispensing Needle, Polyethylene – Conical (PPC), Luer-Lock						
	97221	88660	50 pcs	Grey	16	1.19
	97222	88661	50 pcs	Green	18	0.84
	97223	88662	50 pcs	Pink	20	0.61
	97224	88663	50 pcs	Blue	22	0.41
High Precision Dispensing Tips: Dispensing Needle, Stainless Steel Standard (SSS), Luer-Lock						
	97225	88664	50 pcs	Amber	15	1.37
	97226	88665	50 pcs	Green	18	0.84
	97227	88666	50 pcs	Pink	20	0.61
	97228	88667	50 pcs	Red	25	0.25

Additional Dispensing Tips and Mixer Nozzles

Illustration	Item No.	Order No.	Pack Size	Description
	98741	1146079	50 pcs	Dispensing needle, stainless steel – PTFE-lined (SSTL), 25 gauge
	97262	218288	2 each	Needle selection pack: 2 each of a variety of dispensing needles
	K1003100	88805	50 pcs	Formable dispensing tip, 21 gauge / 0.5 mm
	97248	218275	50 pcs	Luer-Lock® tip caps
	97233	88672	20 + 5 pcs	Luer-Lock® adapter kit: 20 Luer-Locks® and 5 adapters
	97207	88656	40 pcs	10 ml clear syringe barrel kit

Additional Dispensing Tips and Mixer Nozzles

Illustration	Item No.	Order No.	Pack Size	Description
	97283	529462	40 pcs	10 ml amber syringe barrel kit, for UV products
	97263	218287	40 pcs	10 ml black syringe barrel kit, for UV and light cure adhesives
	97208	88657	2 pcs	10 ml syringe airline adapter
	97244	88677	20 pcs	30 ml clear syringe barrel kit
	97264	218286	20 pcs	30 ml black syringe barrel kit, for UV and light cure adhesives
	97245	88678	2 pcs	30 ml syringe airline adapter
	97290	397462	50 pcs	All plastic precision dispensing tip, 20 gauge
	984569	1487440	10 pcs	Static mixer for epoxy and PU in 50 ml, SQ 5.3-24
	n.a.	2900614	10 pcs	Static mixer for epoxy and PU in 50 ml, SQ 24
	984570	1487439	10 pcs	Static mixer for epoxy in 200 / 400 ml, SQ 7.5-24
	1034575	1034575	10 pcs	Static mixer MBX 6.5-20-S 10:1 for LOCTITE AA 3038
	n.a.	2447734	10 pcs	Spray mix nozzle for LOCTITE PC 7255 MFQ-08-24C-13
	8953186	1104046	10 pcs	Static mixer 4:1 / 10:1 for 400 / 490 ml, MCX 08-18
	5289010	545996	10 pcs	Static mixer 1:1 for acrylics in 50 ml, MA 6.3-7
	98457	720174	10 pcs	Static mixer 1:1 / 2:1 in 200 / 400 ml, MC 8-24
	863585	367545	10 pcs	Static mixer 1:1 for MS polymers in 410 ml, MC 13-18
	8953187	1104047	10 pcs	Static mixer 4:1 / 10:1 in 400 / 490 ml, MCX 08-24
	8955989	1453183	10 pcs	Static mixer for LOCTITE 3090 and LOCTITE 4070, MLX 2.5-16-5
	n.a.	1826921	10 pcs	Static mixer 1:1 / 2:1 in 50 ml, MBH 3.2-16 S
	n.a.	1573153	10 pcs	Static mixer 1:1 / 2:1 in 50 ml, MBQ 5.0-24 L
	n.a.	1573135	10 pcs	Static mixer 1:1 / 2:1 in 400 ml, MFH 6.0-24 T

tewipack Uhl GmbH
Industriestraße 15
D-75382 Althengstett
www.tewipack.de

info@tewipack.de
T +49 (7051) 9297 0
shop.tewipack.de

KLEBEN VERBINDET